ANTIGRAVITY

A1

User Manual





V1.0

Convention

Legend

Cautions and Warnings

Tips

Glossary

Read Before Your Fist Flight

Read the following documents before the first flight for your safety:

1. Safety Guidelines
2. Quick Start Guide
3. User Manual

It is strongly recommended to read the above-mentioned documents and watch the video tutorial before using our product for the first time. Follow the instructions provided in the quick start guide to prepare for your first flight. For more information, download and read the user manual from the official website.

Video Tutorials

Scan the QR code to watch video tutorials for the safe and proper use of the product.

https://www.antigravity.tech/guide/A1

Download Antigravity App

Download the Antigravity App and follow the prompted instruction to activate your drone and other devices before first use. Scan the QR code above to download the Antigravity App.

Note that the flight altitude of the drone is restricted to 30 m (98.4 th) and a range of 50 m (164 ft), if the drone has not been linked to the Antigravity App upon the first use.

Disclaimers

This document is subject to change without prior notice as products and firmware are updated. The figures referenced in the manual are for illustrative purposes only and may not reflect the actual product. Users should refer to the physical product.

© 2025 Antigravity All Rights Reserved

Contents

Product Profile 1
Introduction 1
Features 1
Product Overview 2
A1 Drone 2
Front View 2
Rear View 2
Vision Goggles 3
Front View 3
Sides View 3
Bottom and Inside View 4
Grip Motion Controller 4
Preparation for First Flight 6
Setting Up A1 Drone 6
Setting Up Vision Goggles 7
Adjusting Lens 10
Using Vision Correction Lenses 11
Spacer Bracket 12
Setting Up Grip Controller 13
Activate Your Drone 14
Firmware Updates 14
Linking Devices 15
Linking A1 Drone to Vision Goggles 15
Linking Vision Goggles to Grip Controller 15
Take off and Landing 16
Pre-flight Checklist 16
Take Off 17
Landing 19
Auto Landing 19
Landing Protection 20
Precision Landing 20
Manual Landing 22
Post Flight Check List 23
Flight Safety and Control 24
Flight Environments Requirements 24
Flight Protection 25
Flight Altitude and Distance Restriction 25
Flight Safety Best Practice 26
RTH and Obstacle Avoidance Safety Notice 27
Return to Home (RTH) 27
Obstacle Avoidance Safety Notice 28
How to Control Your Drone 28
Basic Operations 28
Horizontal Flight 29
Adjusting Heading of the Drone 29
Climbing and Diving 30
Taking Off and Landing 31

© 2025 Antigravity All Rights Reserved

Stopping the Motors Mid-air 31
Controlling in Free Motion Mode 32
Controlling in FPV Mode 33
Switching Between Control Mode 34
A1 Drone 35
Flight Mode 35
Controlling Mode 36
FreeMotion Mode 36
Flight Indicators 36
Before Taking Off 37
After Take-off 38
Return to Home (RTH) 38
Introduction to RTH 38
Home Point 38
RTH Process Breakdown 39
RTH Flight Maneuver Strategies 42
RTH Risk Notice 42
Obstacle Avoidance and Landing 43
Obstacle Avoidance Overview 43
Obstacle Avoidance 43
Enabling Obstacle Avoidance 44
Obstacle Avoidance Action 44
Propeller Guards 44
Installing the Propeller Guards 44
Propellers 46
How to Replace Propellers 46
Flight Battery 47
Safety Notice for Flight Battery 47
Activation of the Flight Battery 48
Using the Flight Battery 48
Charging the Flight Battery 50
Battery Level Indicator 50
Battery Charging Hub 51
Battery Charging Hub Overview 51
Regular Charging 52
Smart Power Pooling 53
Power Bank 54
Battery Charging Troubleshooting 54
Transferring Footages 55
Quick Reader 55
Quick Transfer from Antigravity App 56
Vision and Infrared Sensing System 56
Features 56
Vision and Infrared System Safety Notices 57
Vision Position Detection Range 57
Flight Recorder 58
Vision Goggles 58
Vision Goggles Overview 58
Home Button 58
Volume Buttons 58
MicroSD Card Slot 59
Power Port 59
Virtual Beam 60

© 2025 Antigravity All Rights Reserved

Basic Operations 60
Re-center the Menu 61
Vision Goggles Menus 62
Flight Menu 62
Vision Goggle Menu 64
Quick Menu 66
Outer Display 67
Outer Display Overview 67
Video Playback 68
Exporting the Footages from Vision Goggles 68
Storage 68
Exporting Footages from Vision Goggles 68
Exporting Footages from SD Card 68
Video See-Through 69
Vision Goggles Safety Notices 69
Grip Motion Controller 70
Power Button and Battery Level Indicator 70
Powering On/Off the Grip Motion Controller 70
Charging the Grip Motion Controller 70
Battery Level Indicators 70
Grip Motion Controller Buttons 71
Grip Motion Controller Signal 74
Alert Sounds 74
Low Battery Alert 74
RTH Alert 74
Antigravity App 75
Intelligent Flight 75
Deep Track 75
Deep Track 75
Auto Mode 75
Circle Mode 75
Optimal Tracking Distance 75
Using Deep Track 76
General Safety Notices for Deep Track 79
Safety Notices for Selecting Object in Deep Track 79
Sky Genie 80
Introduction to Sky Genie 80
Using Sky Genie 81
Sky Path 84
Introduction to Sky Path 84
Using Sky Path 84
Product Specification 87
A1 Drone 87
Vision Goggles 92
Grip Motion Controller 95
Frequently Asked Questions (FAQ) 96
Appendix 98
Compliance Information 98

© 2025 Antigravity All Rights Reserved

Product Profile

Introduction

The Antigravity A1 is an drone that defies limits, that combines advanced hand-eye coordination technology with an immersive flying experience. By using the Antigravity Vision goggles and the Antigravity A1Grip Motion controller, users can experience free-flight motion control, real-time perception of flight attitude, precise control, and panoramic view shooting.

Features

- **8K 360 Video:** Our 8K 360° camera captures all angles during the flight.
- **Free Motion Mode:** Unlock the head movement against the flight direction, enables intuitive fly experience.
- **Flight Safety:** Auto landing gear retraction ensures worry-free flight. Obstacle avoidance system detects obstacles on the flight path.
- **Payload Detection:** Drone lands when detecting excessive payload. Ensure the drone is compliant with recreational use.



- The maximum flight speed of the drone is obtained at sea level in windless conditions. The maximum flight time is defined as the drone is flying at a cruise speed in windless conditions.
- The usage of the 5.8 GHz frequency band is subject the availability of countries or regions. In such cases, the drone will automatically disable this frequency band. Please ensure compliance with local laws and regulations. The 5.1 GHz frequency band is only available in countries and regions where it is permitted by law.
- The availability of the High-Capacity Flight Battery is restricted to certain countries and regions. Contact the local reseller or visit the official store for more information.
- The MTOM (Maximum Take-off Mass) of the drone will exceed 249 grams, when the using the High-Capacity Flight Battery. Please ensure compliance with local laws and regulations regarding takeoff weight with using the High-Capacity Flight Battery.

© 2025 Antigravity All Rights Reserved

Product Overview

A1 Drone

Front View

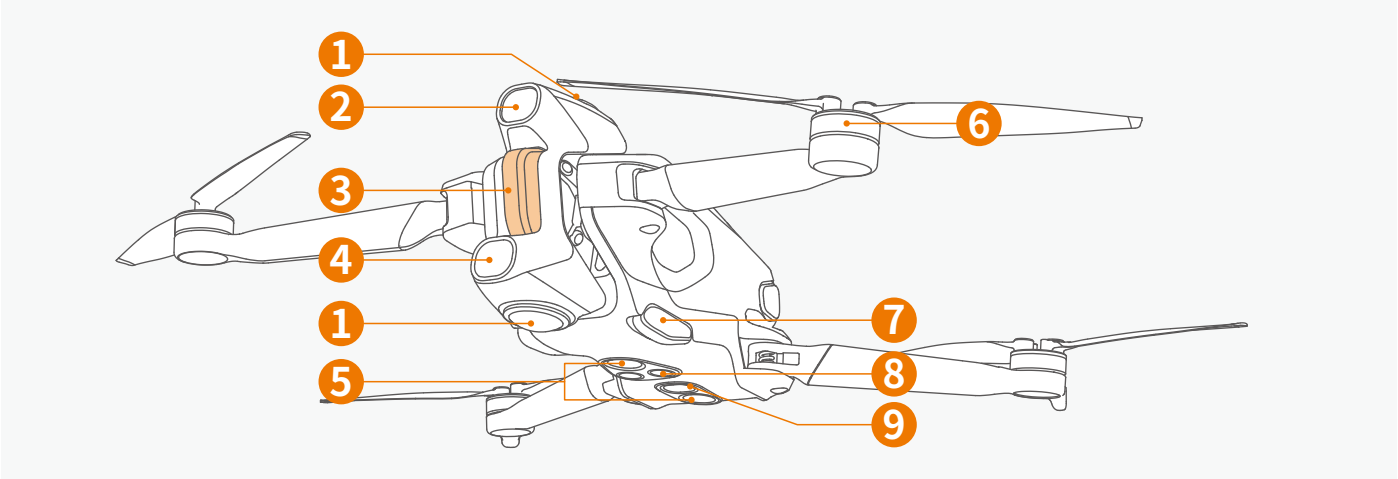

Item	Description	Item	Description
1	360° Camera	6	Motor
2	Forward Vision Sensor	7	Landing Gear
3	Front Indicator	8	Downwards Infrared Sensor
4	Forward Vision Sensor	9	Landing Light
5	Downward Vision Sensor		

Rear View

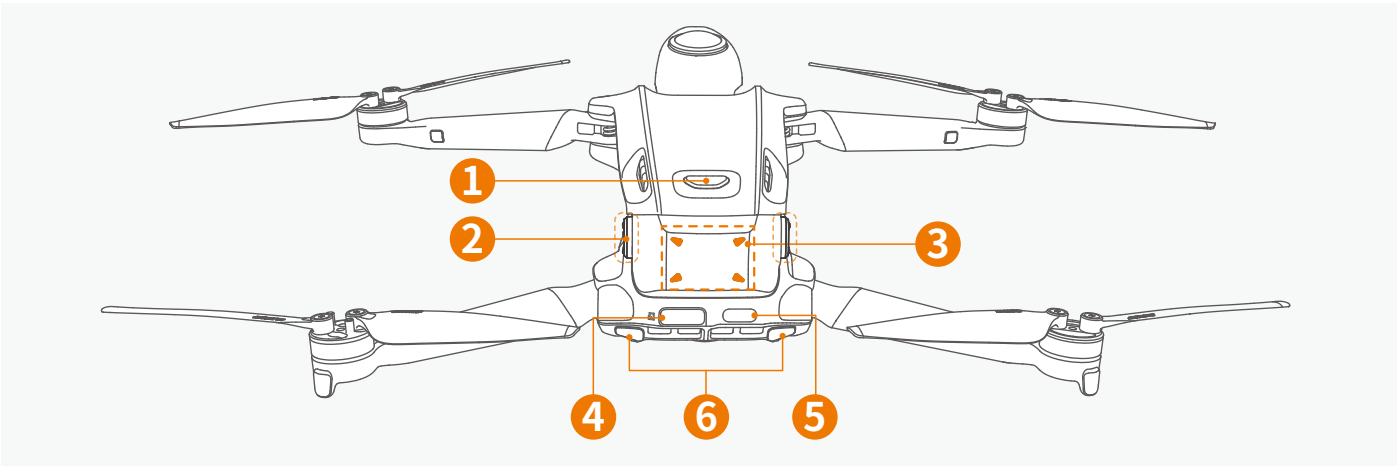

Item	Description	Item	Description
1	Power Button	4	Micro-SD Card Slot

© 2025 Antigravity All Rights Reserved

2	Flight Battery Latch	5	Type-C Port
3	Flight Battery Level Indicator	6	Flight Status Indicator

Vision Goggles

Front View

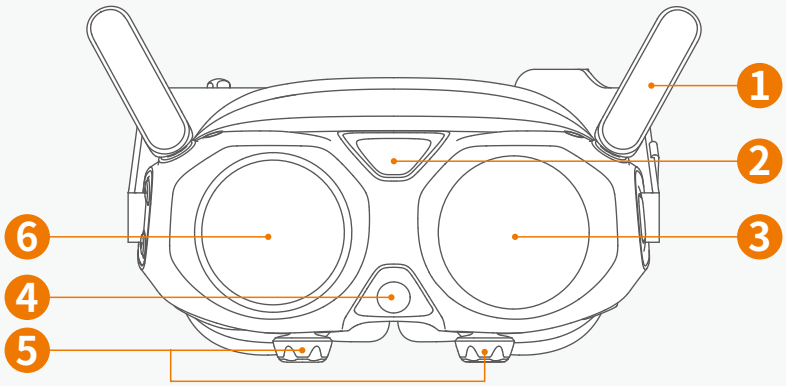

Item	Description	Item	Description
1	Antennas	4	Video See-Through Camera
2	Venting Port	5	Diopter Adjustment Knobs
3	Outer Display	6	Touchpad

Sides View

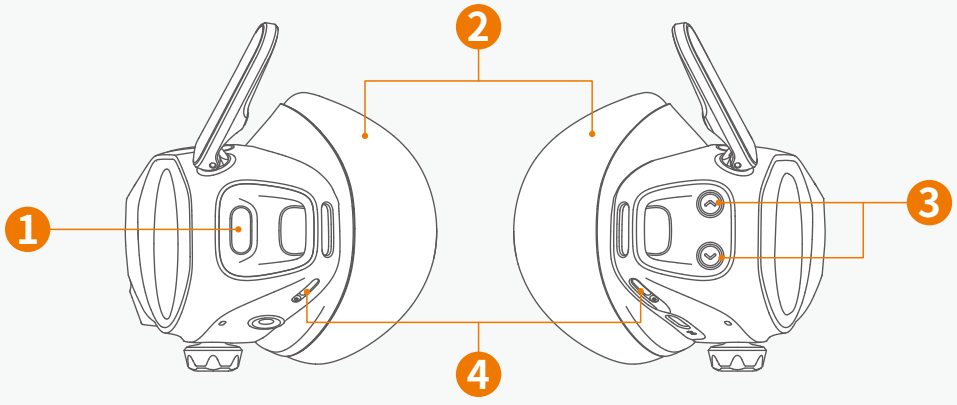

Item	Description	Item	Description
1	Home / Linking Button	3	Volume Button
2	Foam Padding	4	Speaker

© 2025 Antigravity All Rights Reserved

Bottom and Inside View

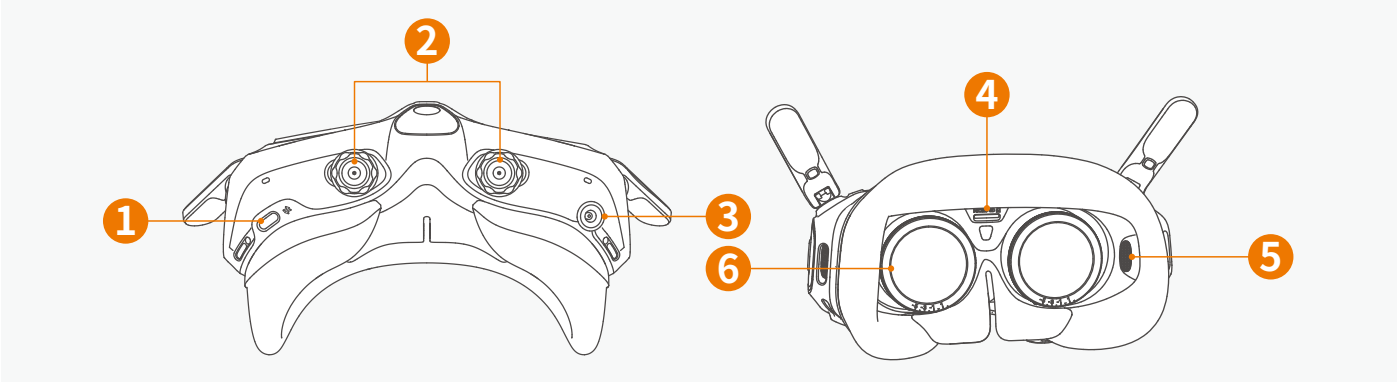

Item	Description	Item	Description
1	Data Port (Unavailable for charging)	4	Memory Card Slot
2	Diopter Adjustment Knobs	5	De-fog Inlet
3	USB-C to DC Power Cable Port	6	Diopter Lens

Grip Motion Controller

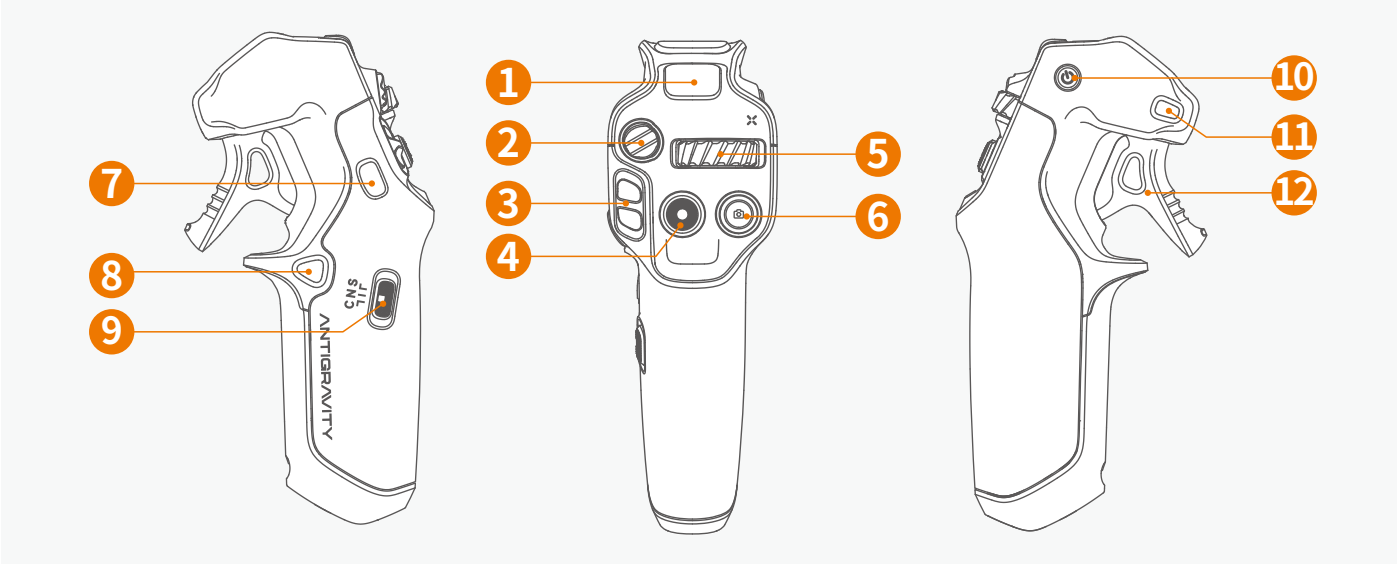

Item	Description	Item	Description
1	**Battery Level Indicator:** Display the current battery level.	7	**Customized C2 Button:** Double press to extend or retract the landing gear.

© 2025 Antigravity All Rights Reserved

2	**Emergency Brake / RTH Button:** Press once to brake and hovers the drone. Press and hold to activate RTH (Return To Home).	8	**Customized C1 Button:** While the drone is in midair, double press to turn on or off the landing lights.
3	**Flight Slider:** ・Pre-flight: Push upward twice in short burst to start the motors (idle mode). Push downward twice to cancel. ・When motor starts: Push the slider upward and hold for over 2 seconds to ascent. ・Mid-flight: Push upward to ascend the drone and downward to descend the drone.	9	**Flight Mode Toggle:** Toggle to switch between these modes ・N (Normal) mode ・S (Sport) mode ・C (Cine) mode
4	**Record Button:** ・In default mode: Press and hold to switch to video mode. ・In video mode: Press once to start recording video.	10	**Power Button:** Press once then press and hold to switch on the Grip Controller. ・When powered on, press and hold for 10 seconds to enforce shutdown. ・Press and hold for 4 seconds to enter pairing mode.
5	**360 Dial Button:** Slide left or right to adjust the live-view and the heading of the drone. Press inward to recenter the perspective of the heading of the drone.	11	**Menu Button:** ・Press once to enter or exit the general menu of the Vision Goggles; press and hold to activate the shortcut menu.
6	**Shutter Button:** ・In default mode: Press and hold to switch from video mode to photo mode. ・In photo mode: Short press to capture an image.	12	**Throttle Trigger:** ・When controlling the drone: pull to accelerate, release to decelerate. ・When interacting Vision Goggles: pull to confirm selections; press and hold to scroll menus.

© 2025 Antigravity All Rights Reserved

Preparation for First Flight

Setting Up A1 Drone

Upon delivery, the drone is in a hibernating state to maintain the battery level. Follow the steps below to prepare for your first flight.

1. The flight battery in the drone is in a dormant state upon delivery. You must activate the battery before using it for the first time. Insert the flight battery into the battery compartment, and then connect it to the drone's USB-C charging port using a charging cable. The battery indicator light will blink green when the battery is activated.

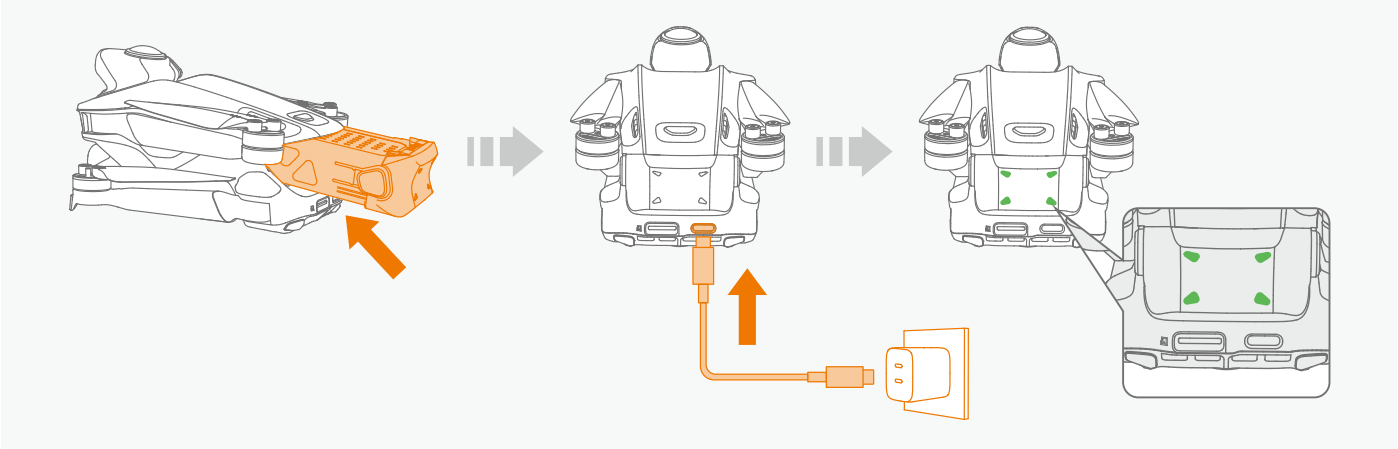

Ensure that at least three or more battery indicator LEDs are lit before the first use.

2. Unfold the rear arms of the drone, then unfold the front of the drone. Ensure that the all propellers are fully deployed.

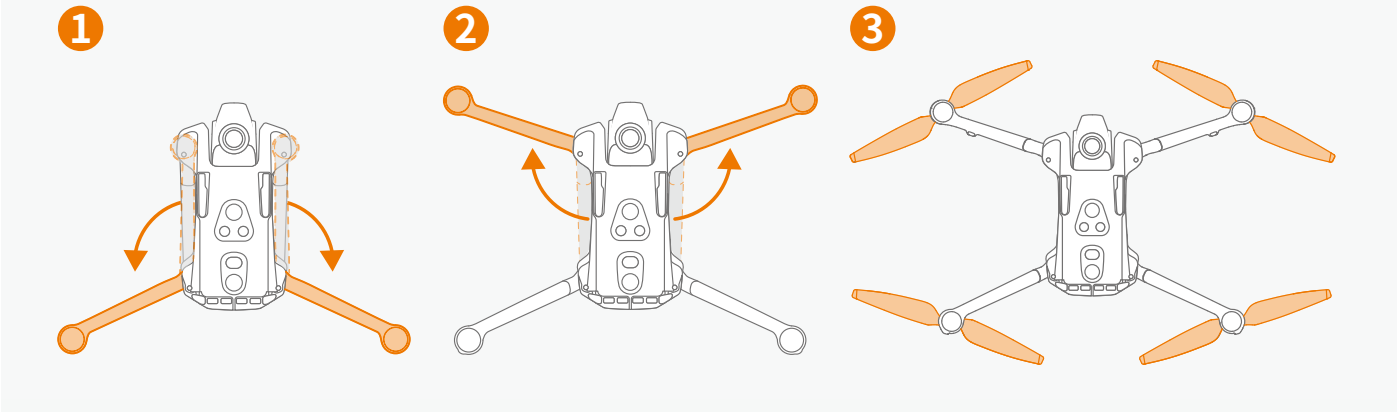

© 2025 Antigravity All Rights Reserved

3. Flip over the drone body and manually extend the landing gear located at the bottom of the drone.

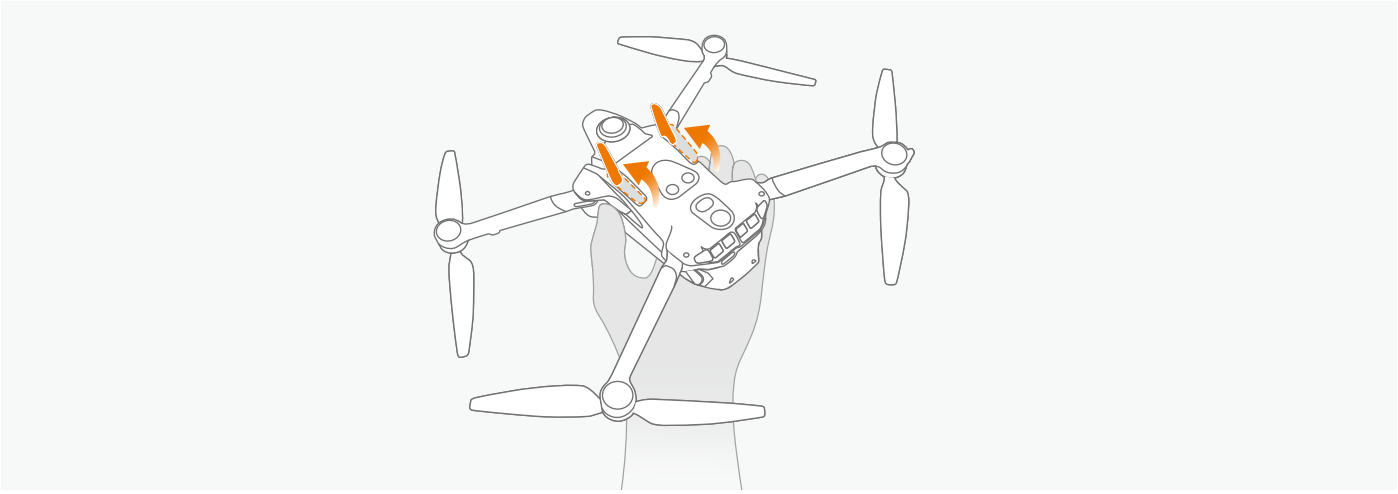

4. Press once and then press and hold the power button for more than two seconds to power on the drone.

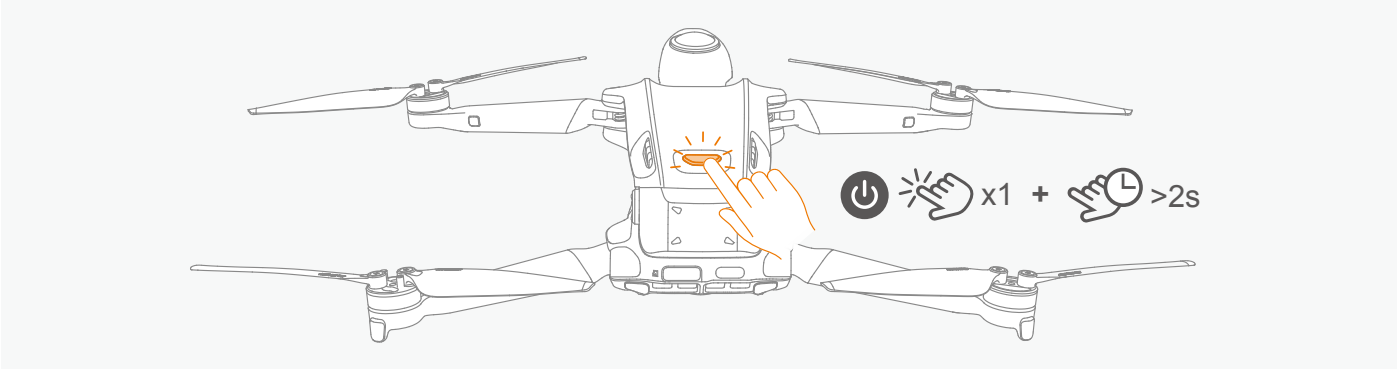

- It is recommend to purchase the Antigravity GaN Fast Charger or other chargers that support the USB PD protocol for optimal charging performance.
- The maximum charging limit voltage on the drone's charging port is 12 V.
- Peel off all stickers on the body of the drone. Make sure both the front and rear arms are unfolded and the landing gears are deployed.

Setting Up Vision Goggles

1. Prior to the first use, charge the battery of the Vision Goggles to activate the battery.

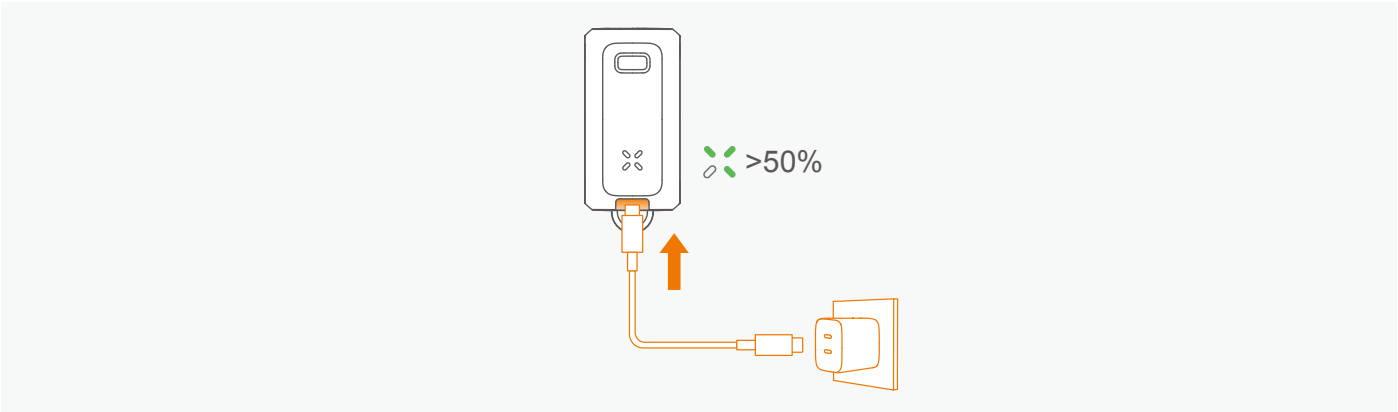

Ensure that at least three or more battery indicator LEDs are lit before the first use.

© 2025 Antigravity All Rights Reserved

2. Unplug the power cable after the charging is complete.

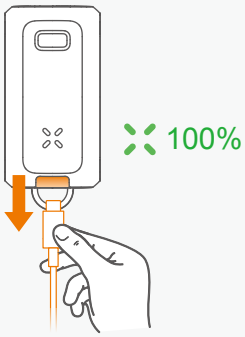

3. Connect the Vision Goggles to the external Vision Goggles battery via the included USB-C to DC charging cable. Attach the Vision Goggles battery lanyard on the buckle.

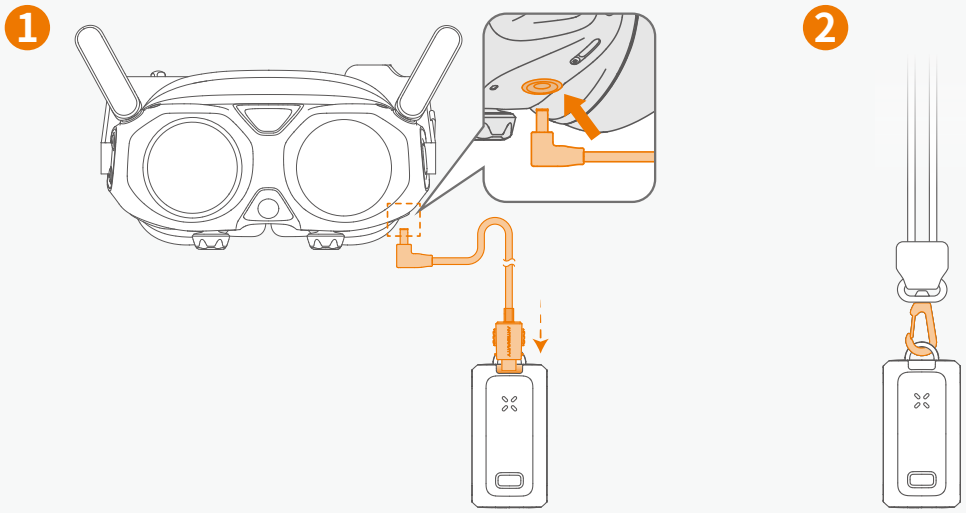

4. Unfold the antennas of the Vision Goggles and hang the Vision Goggles battery on the chest.

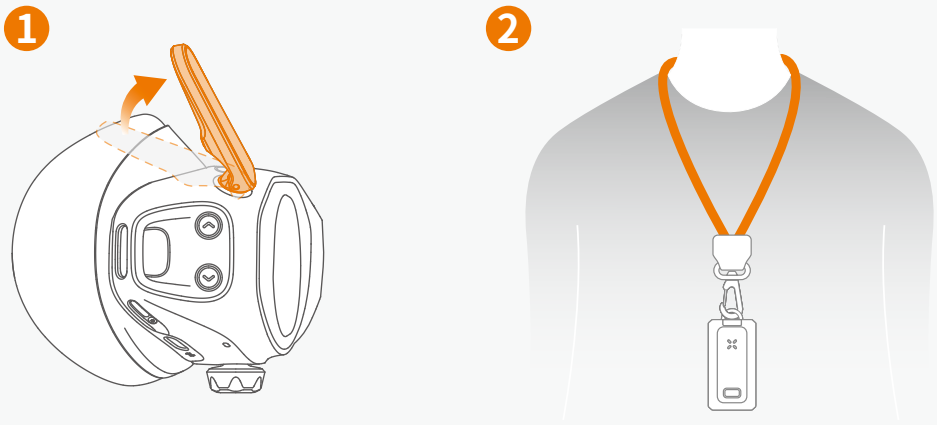

© 2025 Antigravity All Rights Reserved

5. After charging is completed, short press the power button to display the battery level. Press and hold the power button for more than 2 seconds to turn the power on or off.

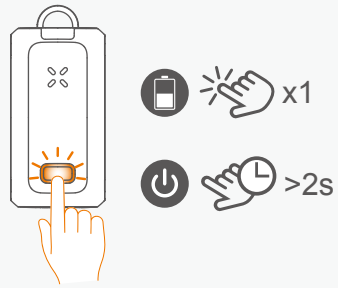

6. Adjust the tightness of the fit via the Velcro on the headband of the Vision Goggles.

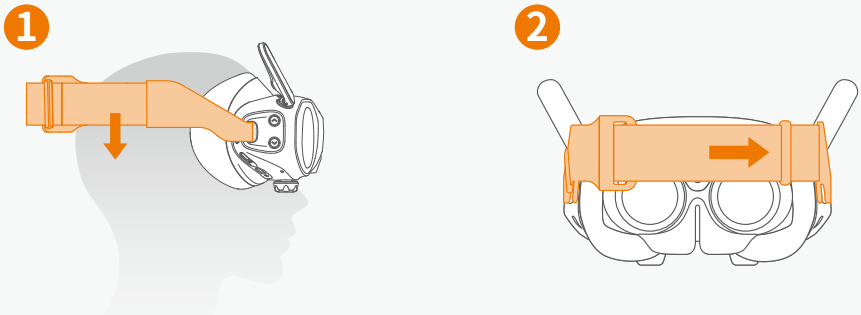

7. After putting on the Vision Goggles, adjust the length of the power supply cable using the caliper on the side of the headband if needed.

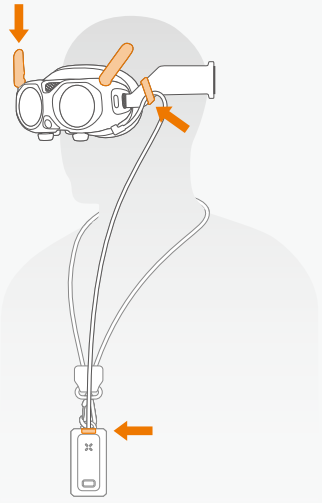

- Remove obstacles or debris around your feet before putting on the Vision Goggles to ensure safe usage.
- Before each use, ensure the connection power supply cable of the Vision Goggles is secured. Failure to do so might cause the danger during the flight.

© 2025 Antigravity All Rights Reserved

Adjusting Lens

If you require vision correction with the prescription ranging from +200° (hyperopia) to -500° (myopia), you need to adjust the position of the lenses in the Vision Goggles to achieve the best using experience.

1. First, rotate the knobs to adjust the diopter. The diopter adjustment range is from +200° (hyperopia) to -500°(myopia).

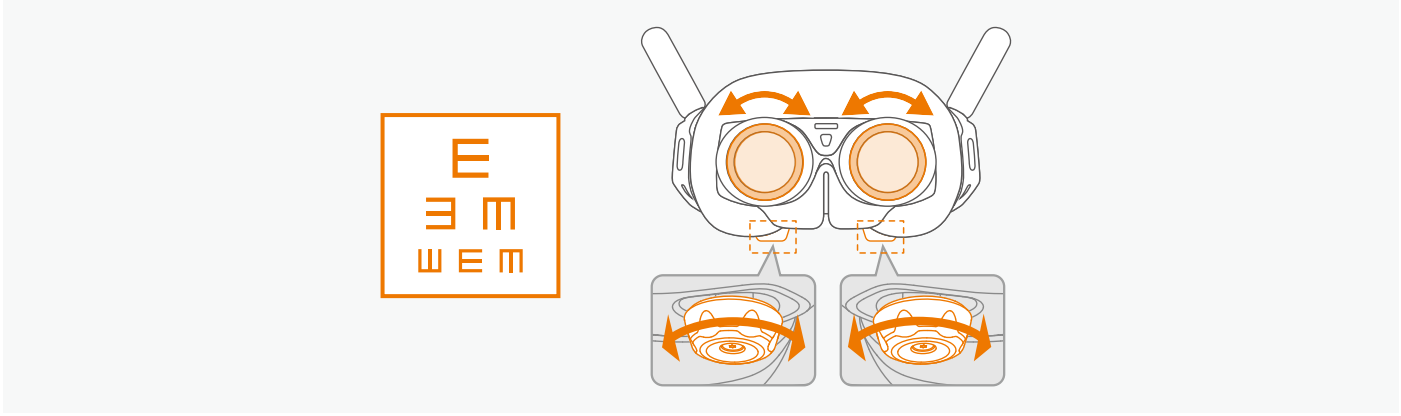

2.Slide the knobs left or right to adjust the interpupillary distance.

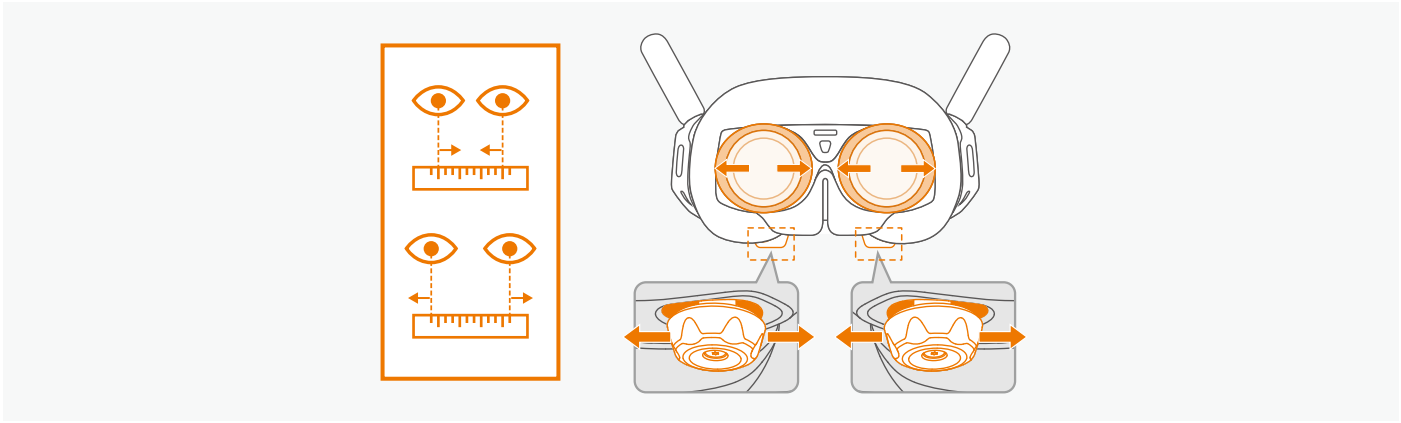

- Before putting on the Vision Goggles, rotate the knobs to move the markers of lens to the approximate range of your vision correct range. Then, put on the Vision Goggles to fine-tune the diopter to achieve the optimal visual experience. Rotate leftwards for short-sighted users and rightwards for far-sighted users.

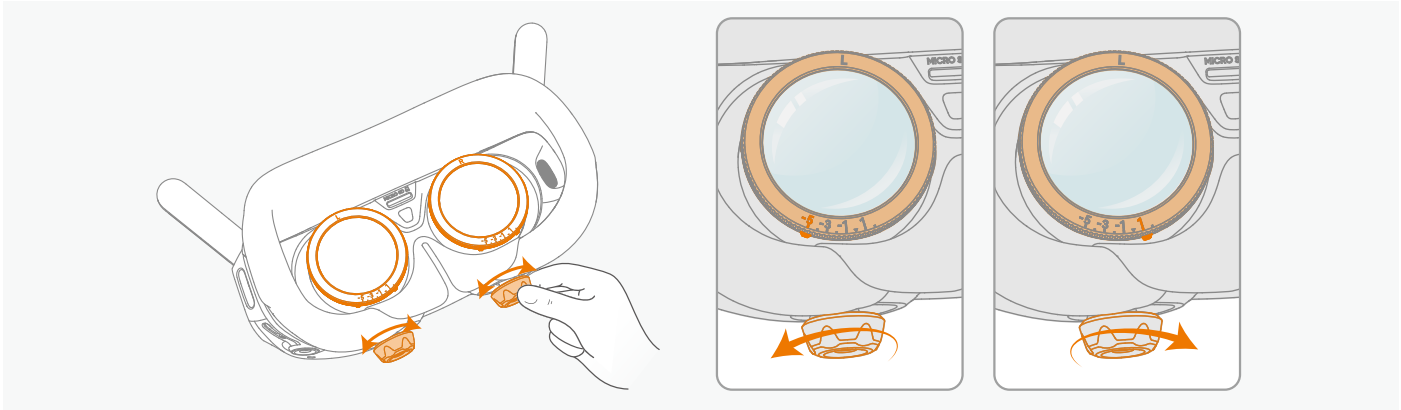

- Diopter lenses need to be purchased separately if your vision correction range exceeds +200° to -500°.
- The diopter adjustment has a limited travel range. Adjust it with gentle range and do not exceed the travel range, otherwise it may cause damage.

© 2025 Antigravity All Rights Reserved

Using Vision Correction Lenses

If your myopia correction range is between -500° and -800°, you can attach a 300-degree myopia correction lens for the optimal using experience.

1. Rotate the lens frames counterclockwise to detach them from the Vision Goggles.

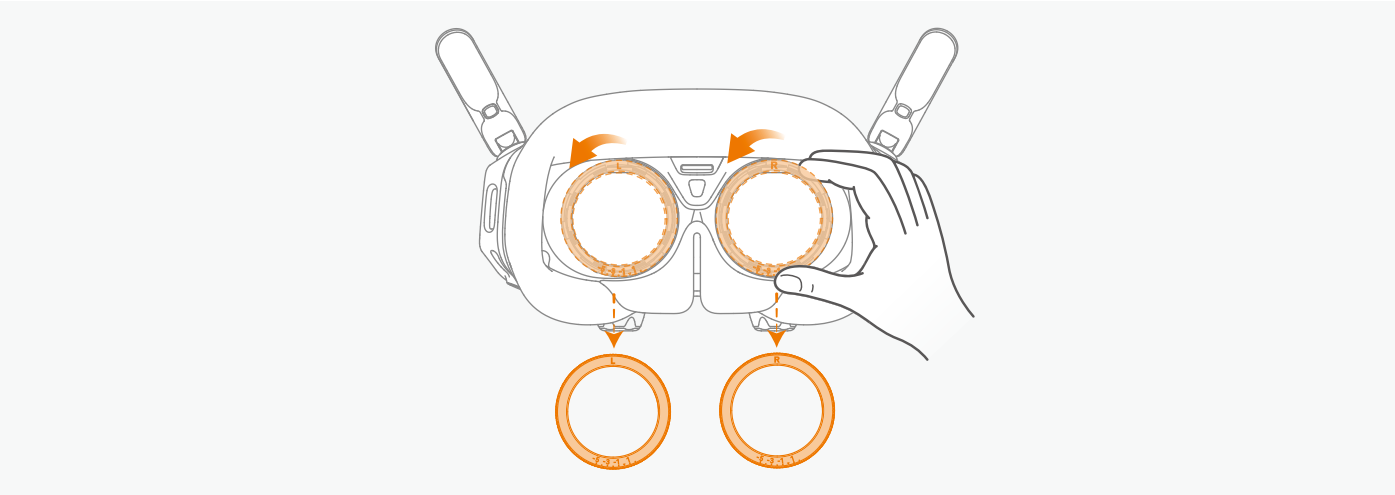

2. Peel off the protective films from the new myopia lens.

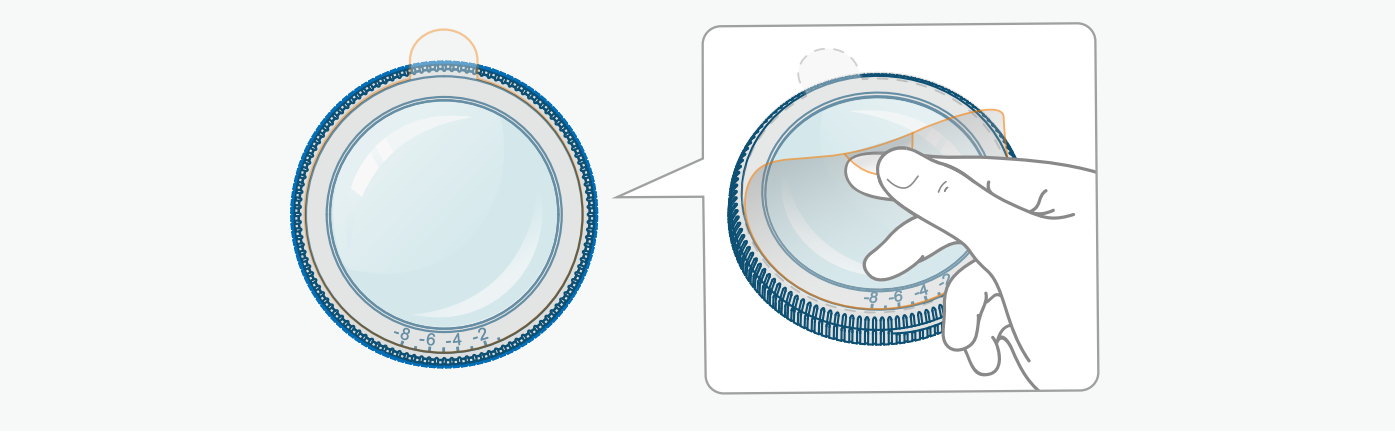

3. Align the white dot on the lens with the white dot on the mounting base on lens barrel. Press it into place and rotate clockwise to secure its place.

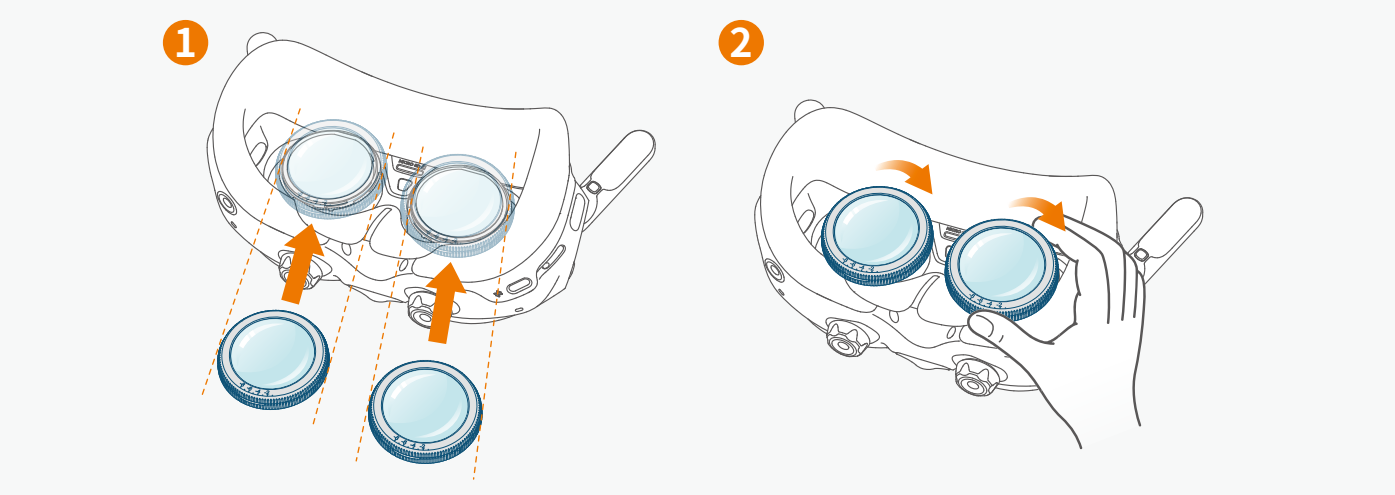

4. Before putting on the Vision Goggles, rotate the knobs to move the markers of lens to the approximate range of your vision correct range. Then, put on the Vision Goggles to fine-tune the diopter to achieve the optimal visual experience.

© 2025 Antigravity All Rights Reserved

Spacer Bracket

The spacer bracket and foam padding on your Vision Goggles are pre-installed. You can choose to keep or remove them depending on your face shape and comfort.

Install

1. To remove the foam padding, pinch and Grip both sides of the foam padding near the nose bridge. Gently pull upward to detach the padding from the Vision Goggles.

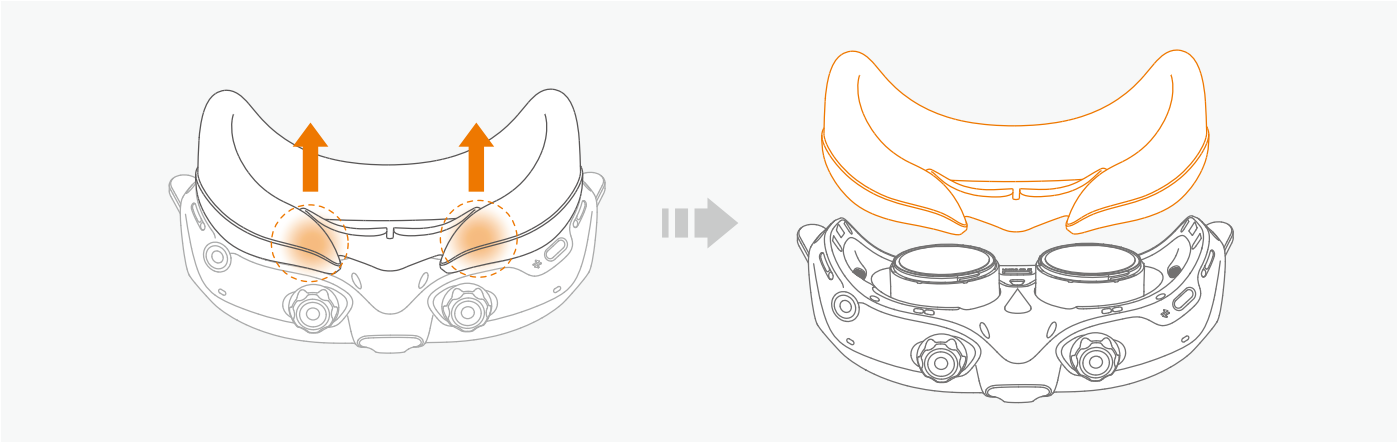

2. Position the bracket so that its clips align with the slots on the foam padding. Press down on both sides near the ears until the padding clicks into place.

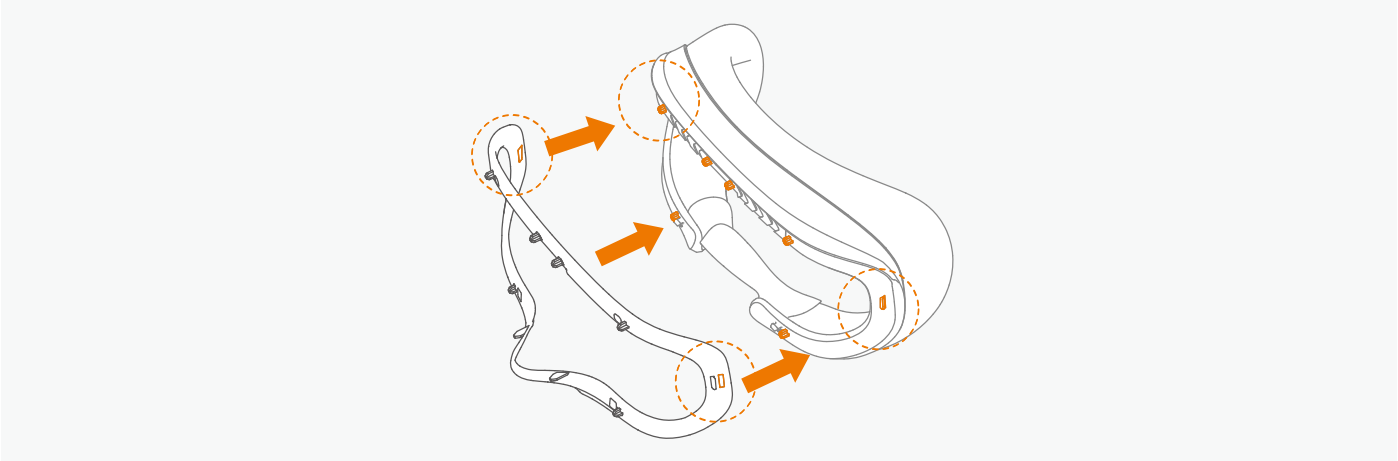

3. Position the foam padding (with the bracket attached) so that its clips align with the slots on the Vision Goggles. Press down on the nose bridge and both sides near the ears until the padding clicks into place.

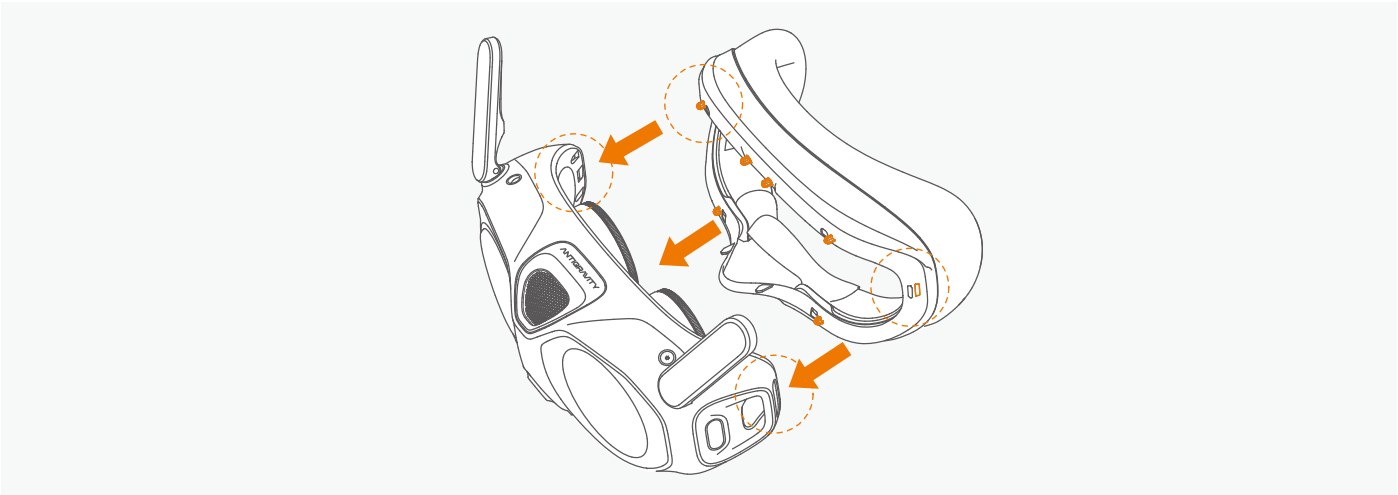

© 2025 Antigravity All Rights Reserved

Remove

1. Removing the Foam Padding From the Vision Goggles.
   a. Grip both sides of the foam padding near the nose bridge.
   b. Gently pull upward to detach the padding from the goggles.

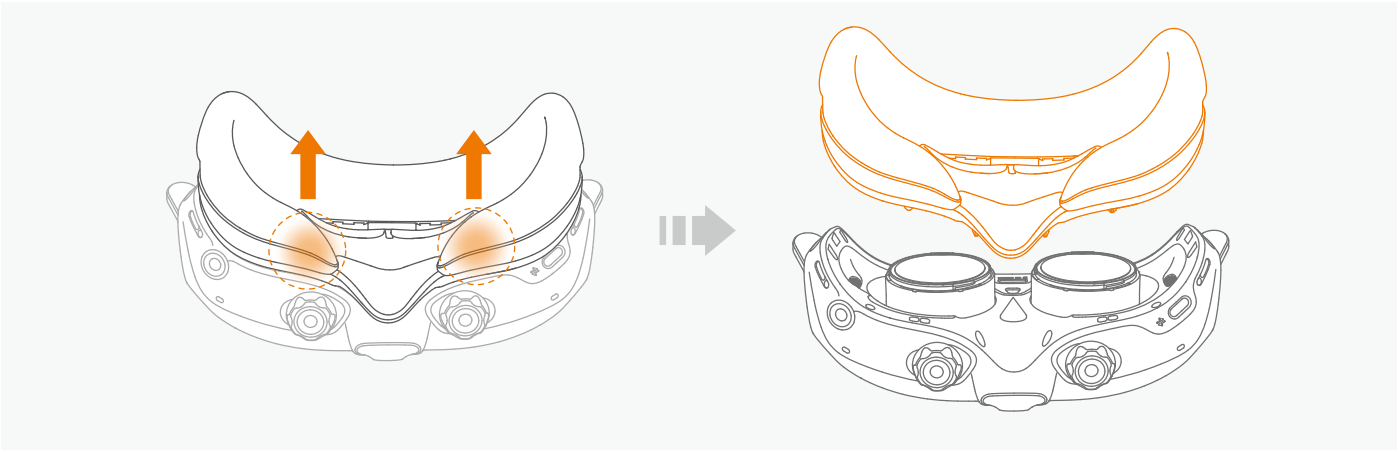

2. Removing Spacer Bracket.
   a. Simultaneously push inward on both sides of the bracket.
   b. Continue pushing until the bracket disengages from the Vision goggles.

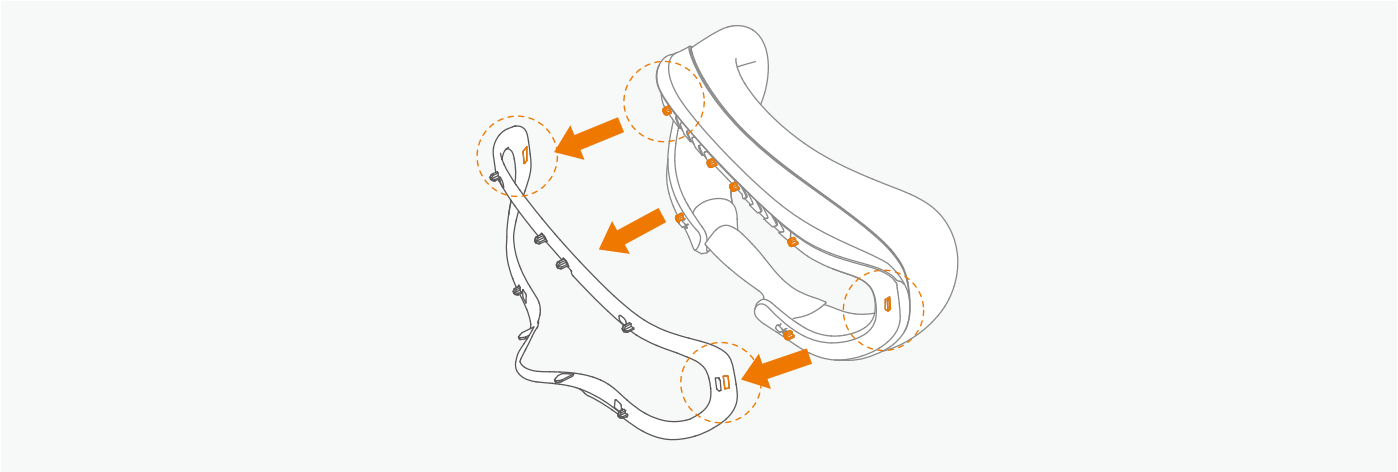

Setting Up Grip Controller

1. Charge the Grip Controller to activate it when using it for the first time. Connect the USB port to a power source to charge your Grip Controller.

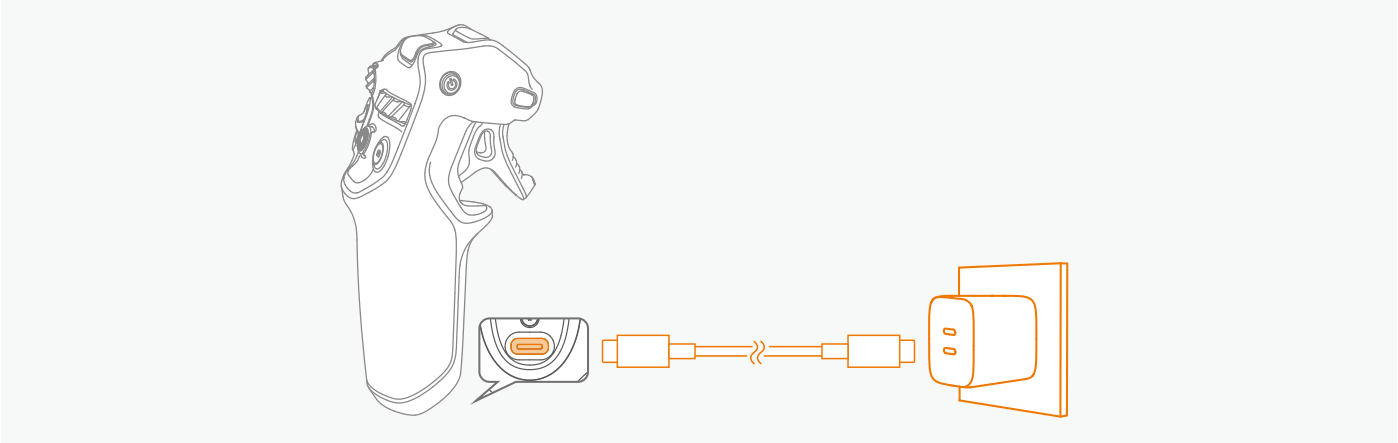

© 2025 Antigravity All Rights Reserved

2. Press once on the power button to check the battery level. Connect the USB-C port to the power source to charge the Grip Controller.

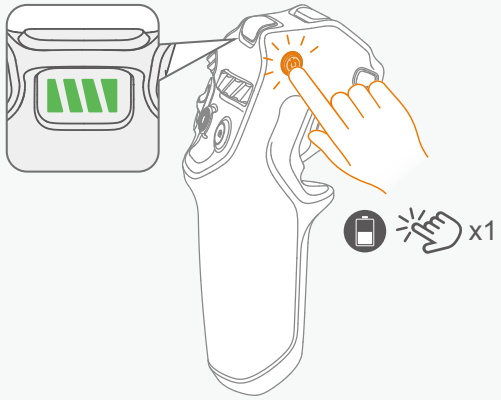

Ensure that at least three or more battery indicator LEDs are lit before the first use.

Activate Your Drone

Before using the A1 drone for the first time, you will need to activate it through the Antigravity App to comply with regulations. Power on the A1 drone, Vision Goggles, and Grip Controller. Download the Antigravity app and ensure Wi-Fi and Bluetooth are enabled on your mobile device. Follow the on-screen instructions to activate your drone.

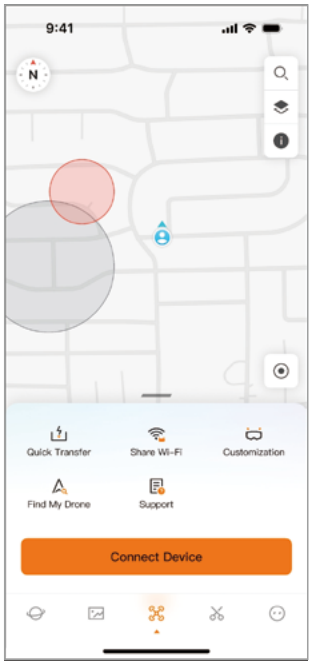

- It is strongly recommended to activate your drone in a stable Wi-Fi connected network environment. Otherwise, it may cause activation failure.
- Ensure you have easy access to personal information (e.g., ID card, passport) before carrying out the activation.
- Upon successful activation, you can proceed to product insurance service within 48 hours.
- The functionality of the drone is limited if you do not activate your drone.

Firmware Updates

It is important to keep your firmware up to date to ensure optimal performance and compatibility with any new features or improvements.

Make sure to regularly check for any firmware update by launching the Antigravity App, check the notifications and follow the on-screen instructions from the Antigravity app or the menu of the Vision Goggles to perform the firmware update. For more information about how to update the firmware, refer to the corresponding section in the Appendix.

© 2025 Antigravity All Rights Reserved

Linking Devices

All three devices are paired upon delivery. No linking is required under most circumstances. Linking is only required after purchasing a new devices, follow the instructions below to link the devices:

Linking A1 Drone to Vision Goggles

1. Power on both the A1 Drone and the Vision Goggles.
2. Press and hold the power button on the A1 Drone for more than 4 seconds to enter the linking state. The A1 drone will emit a beep tone and the indicator at the front will blink green.
3. Press and hold the Home button on the Vision Goggles, and the Vision Goggles will enter the linking state and emit a beep tone as well.

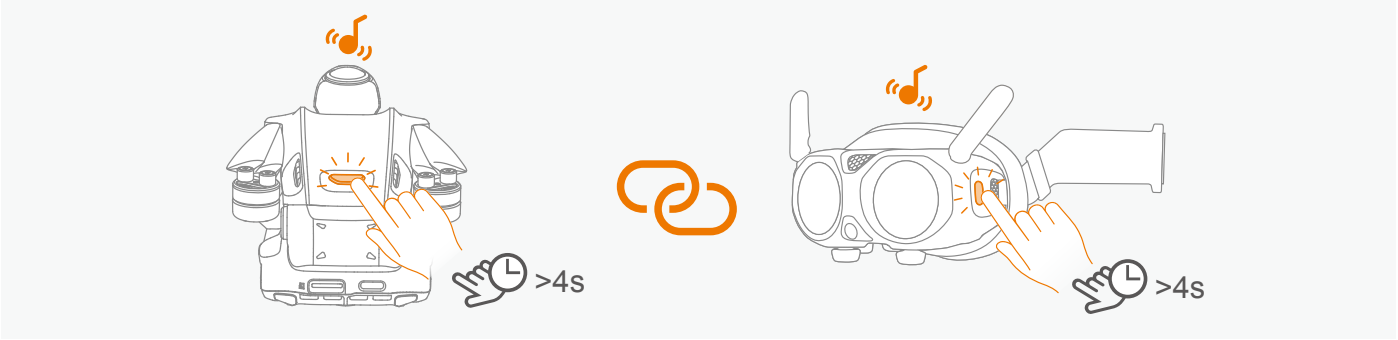

4. The user can see the live view of the drone from the Vision Goggles if the linking is successful. And the beeping tones from both the devices will stop.

Ensure the USB port on the drone is disconnected before attempting the linking.

Linking Vision Goggles to Grip Controller

1. Power on both the Vision Goggles and Grip Controller.
2. Press and hold the Home button on the Vision Goggles, and the Vision Goggles will enter the linking state and emit a beep tone as well.
3. Press and hold the power button on the Grip Controller, and the Grip controller will enter the linking state and emit a beep tone. The battery level indicator will start blinking in sequence.

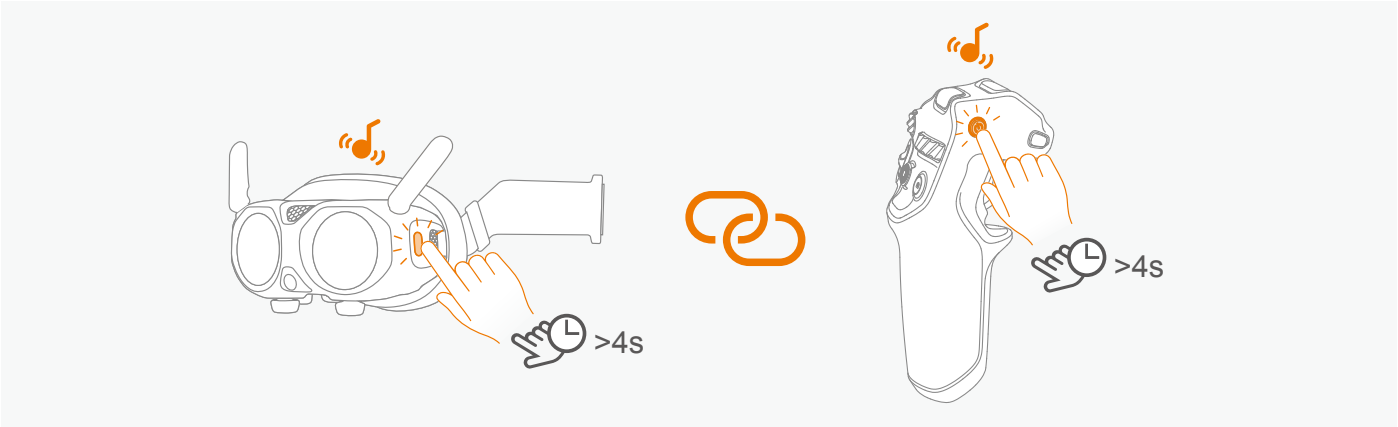

© 2025 Antigravity All Rights Reserved

4. Check the RC signal strength icon from the live-view from the Vision Goggles. The signal icon turns white if the linking is successful.



Ensure that the distance between devices does not exceed 0.5 meters when started linking.

Take off and Landing

This chapter provides basic instructions on how to take off and land the drone.

Pre-flight Checklist

Conducting a pre-flight inspection of your drone is an important step in safeguarding your safety and minimizing the risk of accidents. Before each takeoff, be sure to follow the steps in the listed below:

1. Check if the flight battery and propellers are secured in place. Ensure there is no visible damage to the major components.
2. Check if there is any sign of damage or cracks on the body of drone, the camera lens and on the propeller.
3. Check if the battery is fully charged for the A1 drone, Vision Goggles and Grip controller.
4. Check if the MicroSD card is installed on the drone.
5. Check that the landing gear can be lowered and retracted.
6. Check that the motor is running properly after it is unarmed.
7. Update the Antigravity app if necessary.
8. Check if there is dirt or stains on each of the sensors or camera lenses.
9. Check to verify only the officially approved accessories are installed. Unauthorized accessories installation might affect the safe use of the drone.
10. Check if the RTH height and action is set in the Vision Goggles menu. You must set the maximum altitude, flight distance limits, and RTH altitude in accordance with local regulations.

© 2025 Antigravity All Rights Reserved

Take Off

Go through the pre-flight checklist item by item before taking off. Ensure that each step has been performed, then follow the instructions below to take off your drone.

1. Place the drone in an open area with flat surface and ensure the rear of the drone facing towards you.

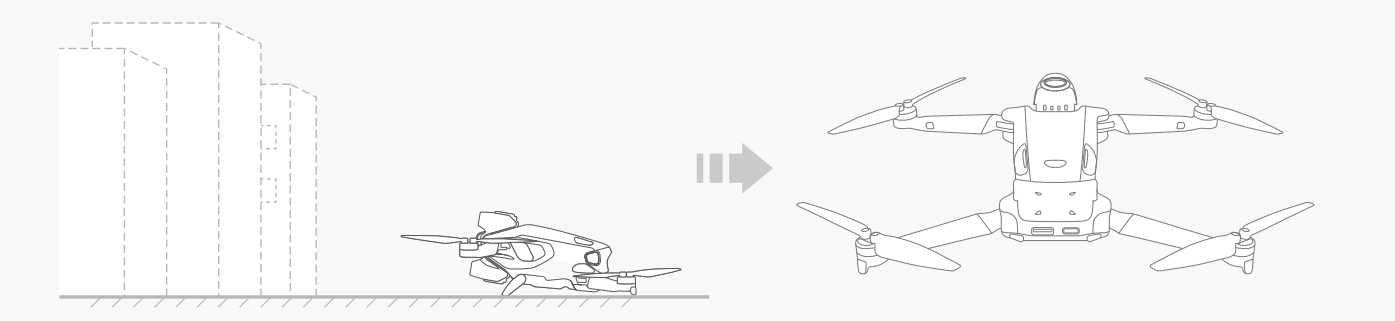

2. Power on the devices in the sequence of A1 Drone, Vision Goggles, and lastly the Grip Motion Controller.

Press the button on the external battery to power on the Vision Goggles. For more details, refer to the section ***"Preparation for First Flight" on page 6***.

3. Place the battery lanyard around your neck as it is the recommended wearing method.



4. Extend the antenna of the Vision Goggles and ensure that the power cable of the Vision Goggles is securely connected.

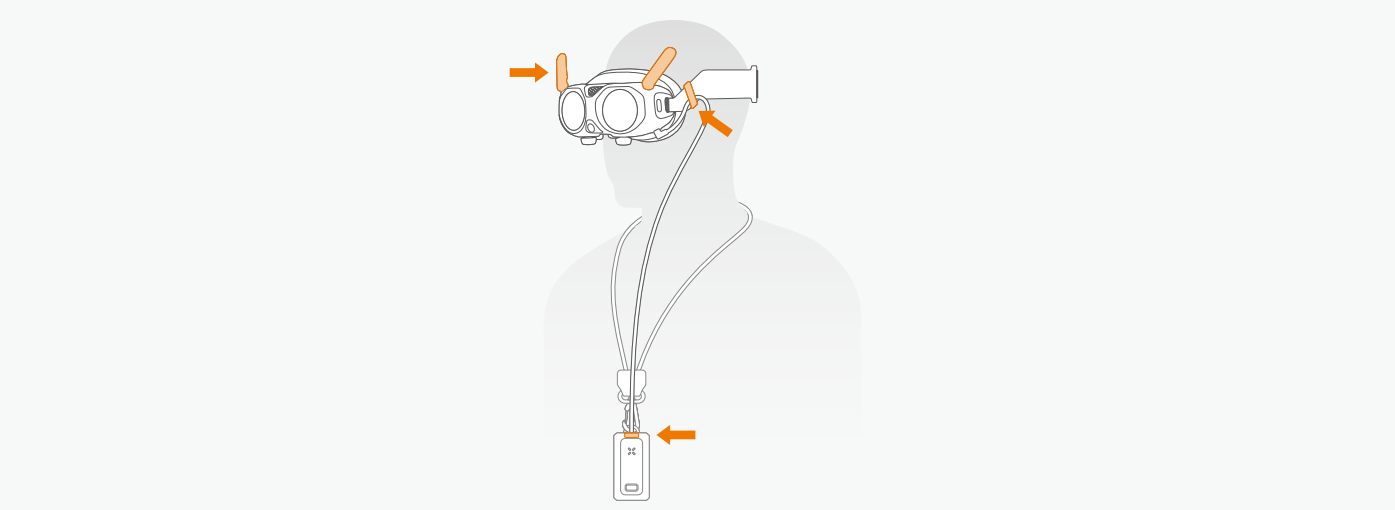

Adjust the length of the power supply cable using the caliper on the side of the headband if needed.

© 2025 Antigravity All Rights Reserved

The Vision Goggles must be used with the power cord and battery provided by Antigravity. Do not attempt to use any third party power USB C cable or batteries to power the Vision Goggles, as this may result in serious or even irreversible damage to the Vision Goggles.

5. To ensure flight safety, you should config the RTH and obstacle avoidance setting before each flight. Set the "Signal Lost Behavior" to RTH and "Obstacle Avoidance Behavior" to "Brake". Ensure that the "RTH Altitude" is significantly higher than the tallest structure nearby.

Before putting on the Vision Goggles, we suggest familiarizing yourself with the button locations on the Grip Controller through the official documentation or video tutorials.

6. Wait for the drone's self-check to complete. If no warnings are displayed in the Vision Goggles, you can then unlock the motors.
7. Make sure the Home point (H) is successfully recorded before attempting takeoff. Failure to do so may prevent safe landing of your drone.
8. Unlock the motors by pushing up the flight slider in two bursts, ensuring a time interval between each burst. The drone will now be ready to take off.

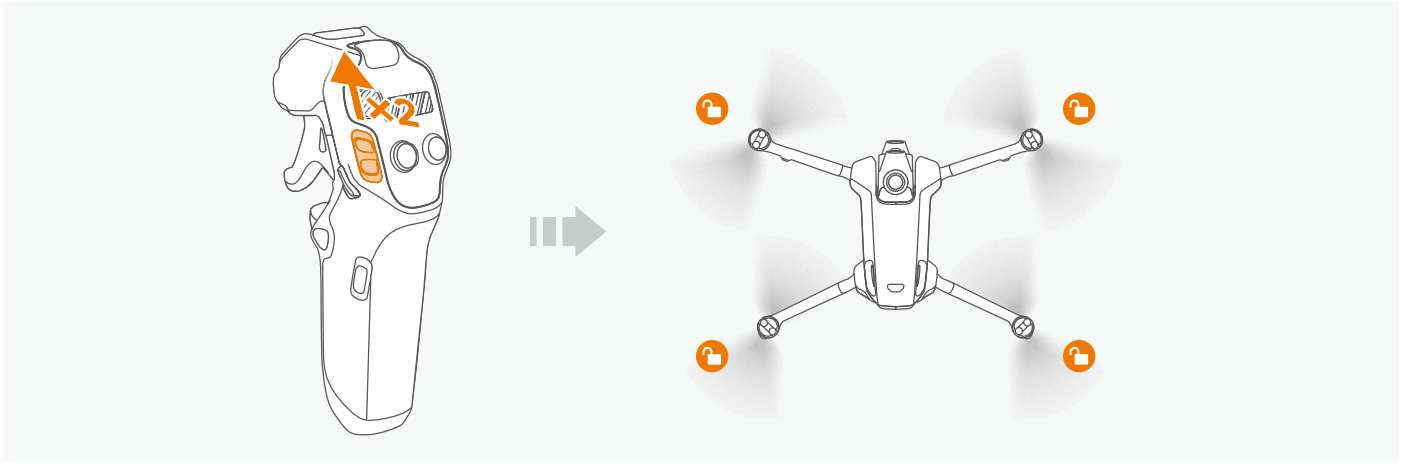

9. Slowly push up the flight slider, the drone will take off and climb slowly to 1.2 meters (3.9 ft) and hover.

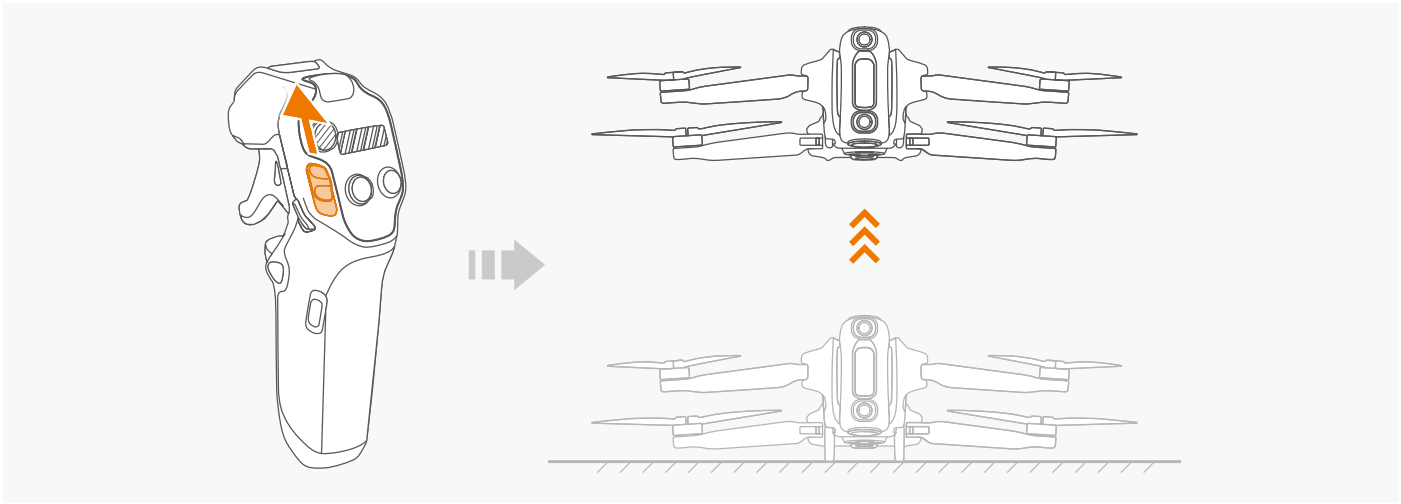

© 2025 Antigravity All Rights Reserved

Landing

The drone can return and land on its recorded Home point either automatically or manually. This chapter describes the procedure on how to land your drone safely by your Grip controller.

Auto Landing

1. Press the RTH button on the Grip Controller for more than 2 seconds, the drone will proceed to RTH and land.

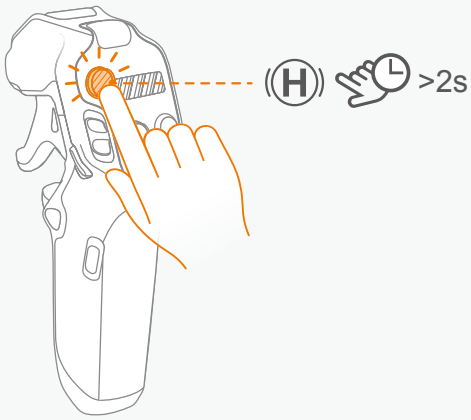

Make sure the Home point is recorded before activating the RTH. Do not activate the RTH if the Home point is refreshed and recorded in an unsuitable area (e.g., near water)

2. After the Return to Home (RTH) is activated, your drone will change its heading and start to fly back to its Home point at the pre-determined RTH altitude and attempt to land itself.

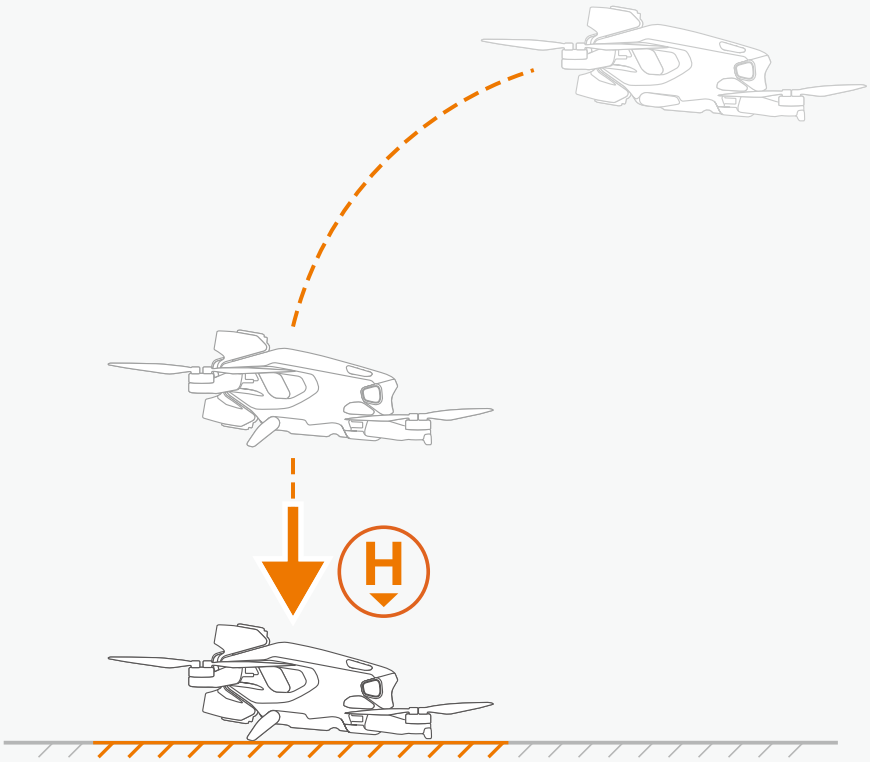

3. After landing at the Home Point, the drone will stop its propellers on its own.

Upon landing is complete, it is advised to power off the A1 drone first then the Vision Goggles and Grip controller. Otherwise it may trigger the RTH signal lost alarms.

© 2025 Antigravity All Rights Reserved

Landing Protection

When the drone is in automatic Return-to-Home (RTH) mode or in the midst of manual landing, the landing protection automatically activates to ensure a safe landing. Follow these tips while the drone is landing:

1. If the landing area is well-lit and the conditions are detected as suitable for landing, then landing protection will engage and run in the background to land the drone automatically.
2. When landing protection is engaged and the drone determines that the landing area is unsafe for landing (e.g., uneven ground or water surface), the drone will abort landing, hover, and await user input.

⚠
- Landing protection assists in judging the landing environment. However, user discretions on whether the landing environment is suitable for lading are still required.
- If the drone experiences a system-defined emergency (such as critical low battery, battery failure, or failed takeoff), landing protection will not take effect, and the drone will override landing protection to land itself.
- The performance of the landing protection is subject to external environments. Due to the system limitation, the drone will keep descend and land in the below scenarios:
  a. The terrain below the drone is characterized by a solid color, lack of distinct texture, dynamic texture, reflection, or dimly lit area. For instance, when the landing site is a tiled ground, dimly lit garage floor, or swaying green field.
  b. When obstacles are present at the landing site, and the obstacle is characterized by a lack of distinct features, reflective, and monochromatic color. For instance, obstacles such as rocks or protruding tiles.
  c. There are small obstacles below the drone, such as wires, small tree branches.
  d. A flat scene below the drone, such as trimmed bushes, flat tree tops, or hemispherical shapes.
- In the following scenarios, landing protection may not be operational , and the Vision Goggles will prompt the user that landing is aborted:
  a. The terrain below the drone resembles a body of water (such as wet ground, flooded ground).
  b. Textured non-flat areas (slopes, steps, etc.) appear in the flat area around the drone, such as a monochromatic color car roof or small table.

Precision Landing

The drone will scan and attempt to match the terrain during the RTH process. When the drone determines that the current terrain matches the recorded Home point, it will land with precision. It is recommended to follow the steps below for optimal performance of precision landing.

1. First, ind a spot that you think is suitable for takeoff. Place your drone on the ground first. Then power on the drone and allow it to search for GNSS signals.

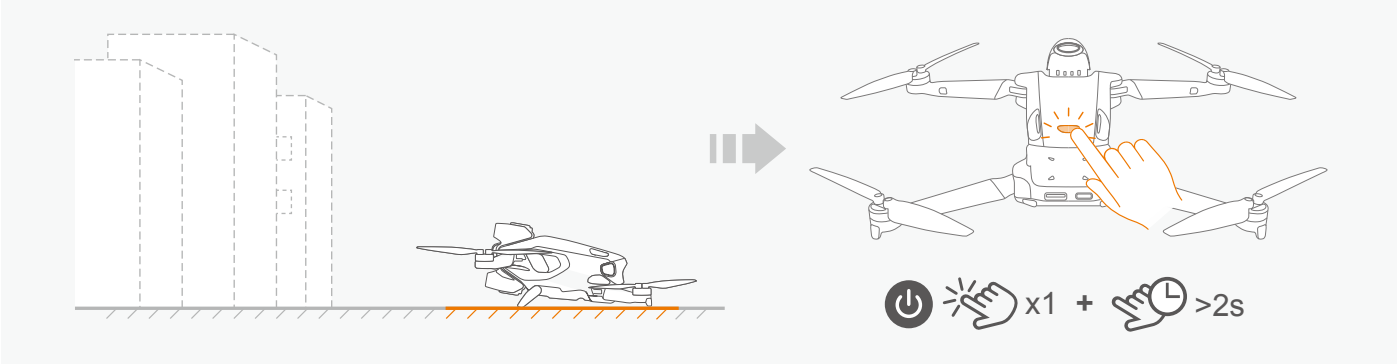

© 2025 Antigravity All Rights Reserved

2. After the GNSS signals are obtained and the Home point is recorded, proceed to the takeoff operation. During takeoff, you must ascend the drone vertically for at least 6 meters above the ground, and then fly horizontally.

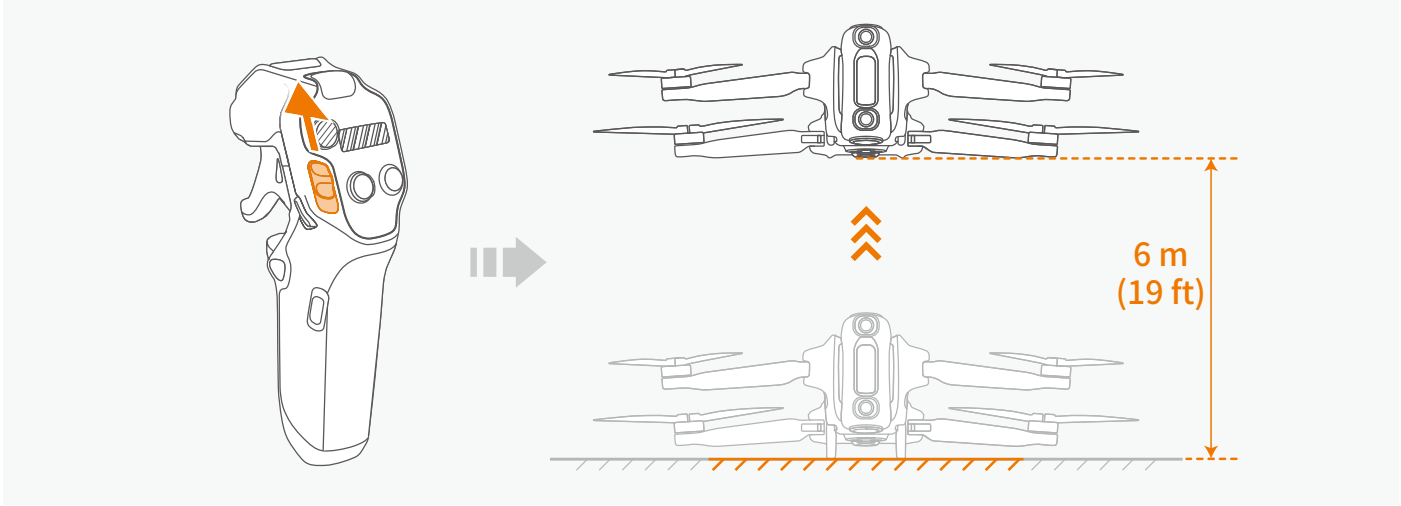

3. When executing RTH, the drone will then return and land at the Home point with high precision.

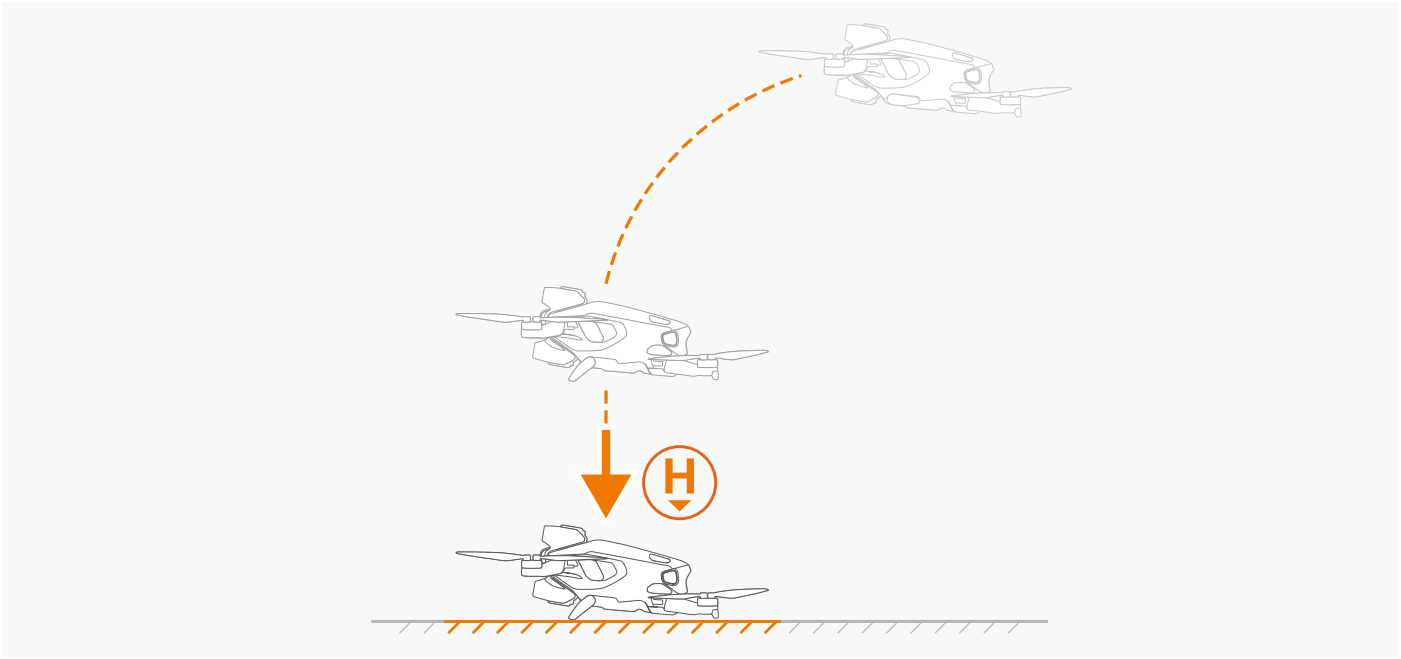

⚠ · The performance of Precision Landing is limited by the following conditions:

a. The home point must have been successfully recorded during takeoff and must not be changed during the flight. Otherwise, the drone will not be able to land safely due to the terrain feature not matching.

b. During takeoff, the aircraft must first ascend vertically at least 6 meters (19 ft) before flying horizontally.

c. The terrain features of the Home point must remain largely unchanged.

d. The terrain features of the Home point must be sufficiently distinct. The performance of Precision Landing will be affected when flying in scenes such as snow-covered areas.

e. The lighting conditions near the Home point are too bright or too dark.

© 2025 Antigravity All Rights Reserved

Manual Landing

1. In the absence of a strong GNSS signal, users can still manually control the drone to fly back to the vicinity of the return point.
2. Control the drone's movement and guide it to an open, flat ground for landing. Release the throttle trigger of the Grip Controller, then the drone will hover above the landing area.
3. Push the unlock slider downwards and then drone starts descending.

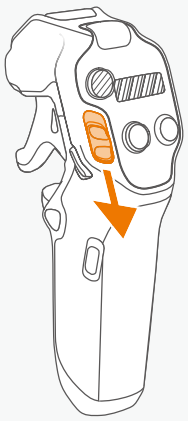

4. Tilt your line of sight downward to locate an suitable landing area when the drone is approaching the Home point. Point the Grip Controller towards the landing area and hold onto the throttle trigger.

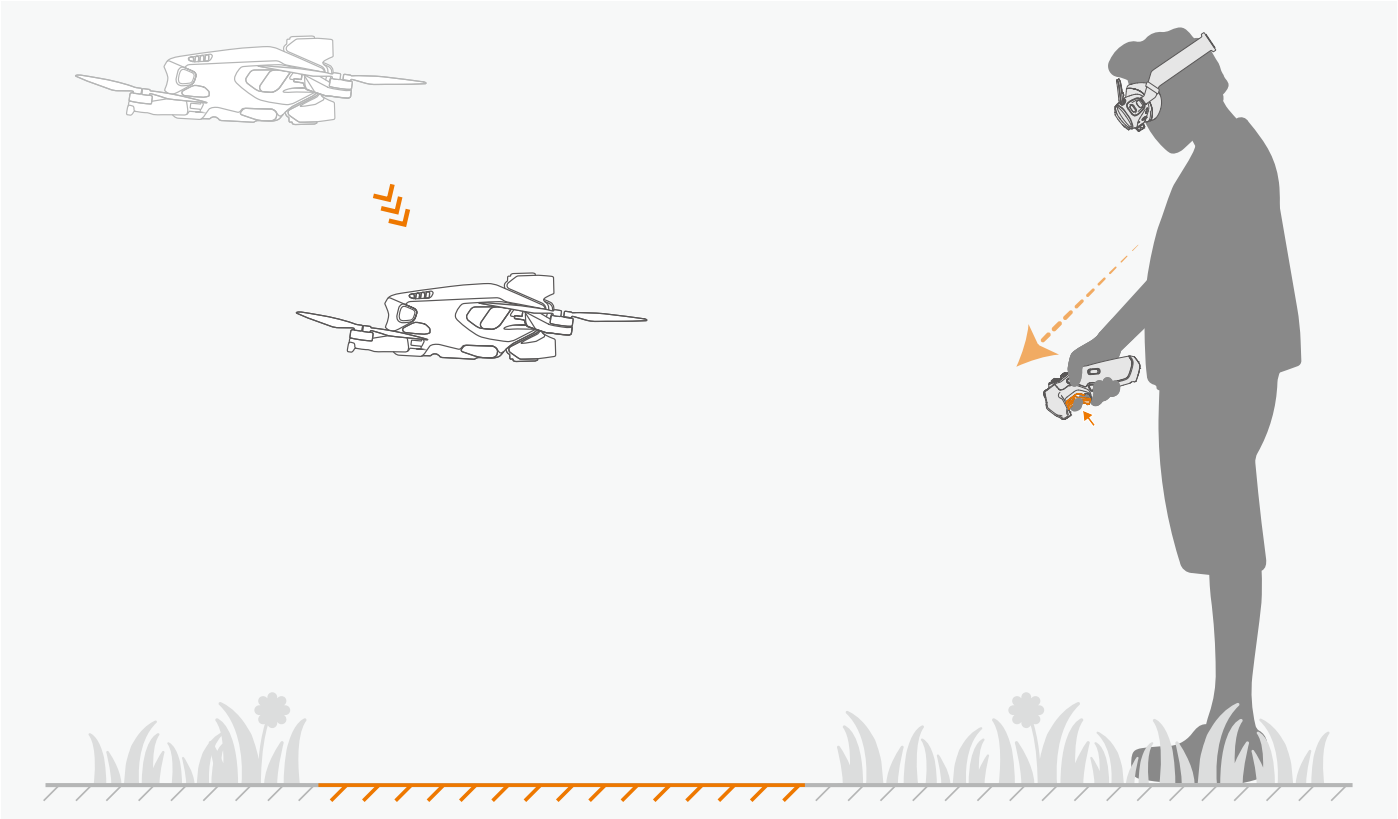

© 2025 Antigravity All Rights Reserved

5. The drone descends to 0.5 meters (1.6 ft) above the ground. Continue pushing the slider downwards then the drone will enter landing stage and the landing gear will automatically lowered and proceed to land.

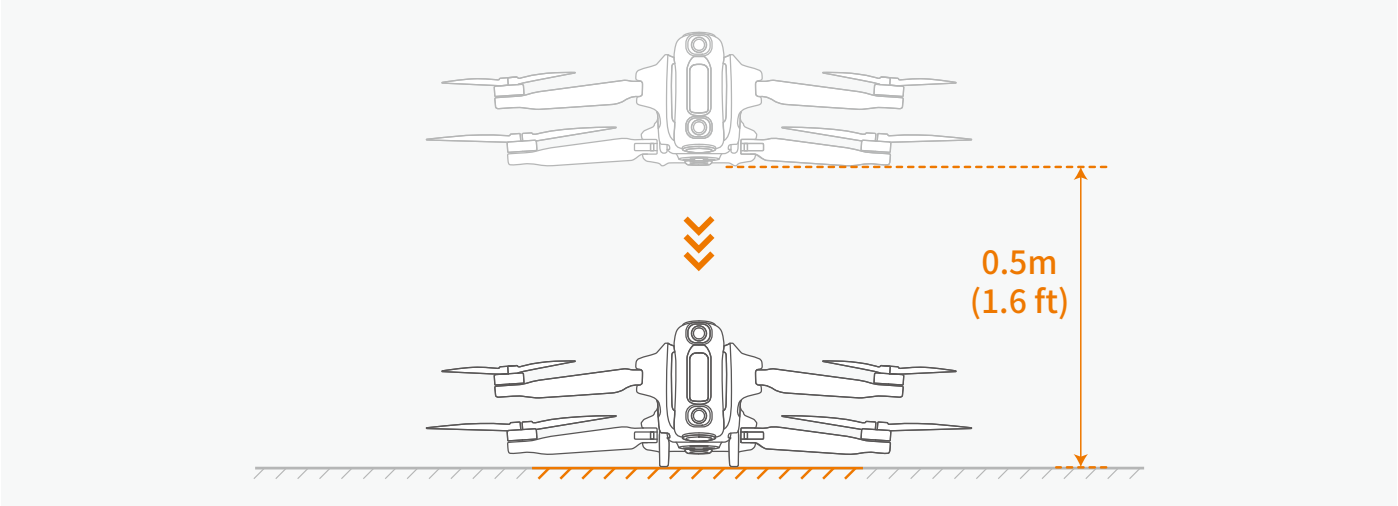

Post Flight Check List

1. Inspect the flight battery and the propeller, ensure there is no visible damage.
2. Brush off the dirt and stains on the camera and sensor lenses by using the official cleaning wipe.
3. Ensure the landing gear is retracted. Manually retract them if required.

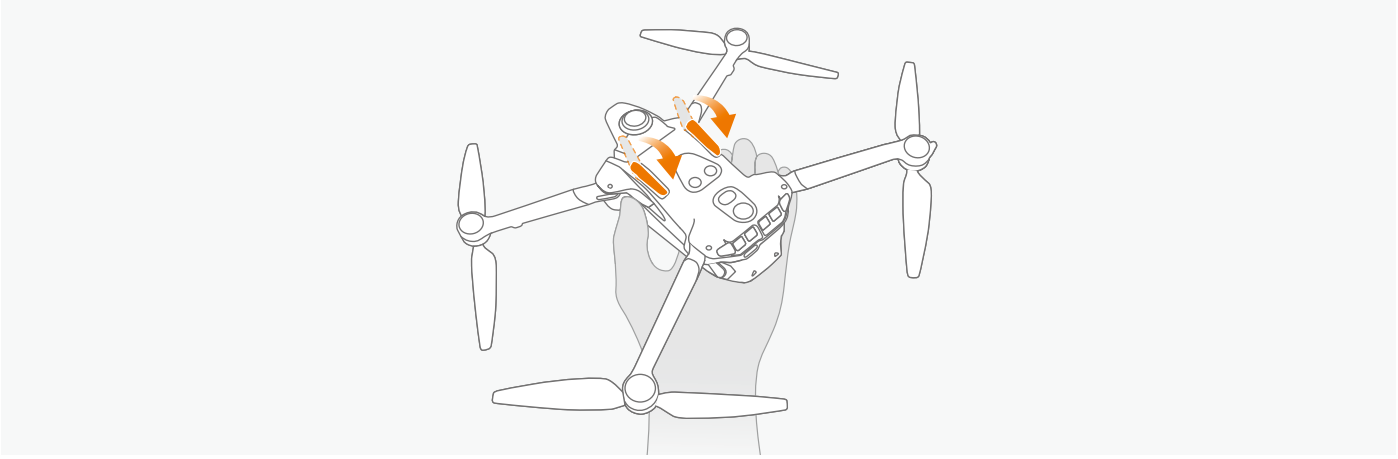

Landing gear must be retracted; otherwise, you will not be able to place the drone into the storage case.

4. After powering off the drone, ensure that all four arms are folded.
5. After powering off the drone, ensure that the antennas on the Vision Goggles are folded.
6. Your flight battery will hibernate when stored for an extended period. Charging your battery at intervals is recommended to allow the battery to exit from hibernation.
7. Store the drone, controller, batteries, and battery charger in a dry environment. The recommended storage and transportation temperature range is between 15°C (59°F) to 25°C (77°F) with an approximate humidity of 40%. No altitude restriction is imposed.

After using the drone in a humid or rainy environment with condensation, make sure to let it sit or dry at low temperature before storing to prevent moisture from affecting the lens on the drone.

© 2025 Antigravity All Rights Reserved

8. Before servicing the drone (such as cleaning or installing propellers), be sure to remove the battery first. Use a soft cloth and the official lens cleaning cloth to remove any dirt or dust, ensuring the drone and propellers are clean. Do not clean the drone with a wet cloth, and avoid using alcohol-based cleaners. Liquid may leak into the drone's shell, causing a short circuit and damaging electronic components.
9. When replacing or inspecting the propellers, refer to the instructions in ***"Power On and Off" on page 49*** to power off the drone first.

Flight Safety and Control

Flight Environments Requirements

1. Do not operate in severe weather conditions, such as strong winds (wind speed 10.7 m/s (23.2 mph)and above), snow, rain, fog, and sandstorm etc.
2. Do not maneuver the drone in and out of the clouds, as it is dangerous and poses unpredictable risk.
3. Do not use the drone in high-temperature, flammable, and explosive environments.
4. Choose an open area with no tall buildings or structures nearby. As the presence of large amount of steel reinforcement will affect the operation of the on-board compass and block GNSS signals, resulting in poor positioning performance or even the inability to locate the drone. Therefore, do not take off on a balcony or within 10 m (32 ft) of a building, and it is recommended that you steer the drone at least 10 m (32 ft) away from buildings during flight. When the drone approaches a building or highrises, it is recommended to exit from the automatic RTH and land the drone manually in the final phase of RTH.
5. When operating in high-altitude areas, due to environmental limitations, the performance of the battery and motors will be impacted, and flight performance will be affected. Please fly with caution. For the drone with the standard flight battery, the maximum takeoff altitude is 4000 m (13,123 ft). For the drone with a high-capacity flight battery, the maximum takeoff altitude is 3000 m (9,842 ft). When operating in high altitude areas, attaching the propeller guard to the drone while using the high-capacity flight battery can noticeably reduce the drone's performance, fly with caution.
6. The braking distance of the drone is affected by the altitude of the flight environment. The higher the altitude, the greater the braking distance required. When operating in areas with an altitude greater than 3000 m (9,842 ft), users should reserve at least 25 m (82 ft) of horizontal braking distance to ensure flight safety.
7. Maintain line-of-sight control, stay away from obstacles, crowds, water surfaces, and stay well above the water surface.
8. Maintain safe altitude from the water surface or the ground when operating your drone.
9. Do not fly in areas with high-voltage power lines, communication base stations, or transmission towers to avoid transmission interference with the Grip Controller.
10. The GNSS positioning system is not operational for flights within the Arctic and Antarctic Circles. However, you can still use the vision positioning system for stabilization.
11. Do not takeoff from the surface of moving platform (such as moving cars, boat deck etc.) or inclined surfaces. When taking off, be sure to choose a stationary horizontal platform.
12. Do not take off on the surface of solid-colored objects or objects with strong reflections and lack of distinct texture (such as the roof of a car).
13. Operate the drone, remote controller, battery, and battery charging hub in a dry environment.

© 2025 Antigravity All Rights Reserved

Flight Protection

Flight Protection Area

The flight protection system designates safe flying locations, provides flight risk assessment and safety tips for your flights, and offers information on controlled airspace. Drone cannot take off from or fly into the protection area, hence, it is important survey the area before you attempt to operate your drone. Users can check if their locations are near the flight protection zones using the Antigravity app. The system restricts takeoff and flight in areas that may pose safety or security risk to others. For the policy regarding flight protection areas, visit the official website (*https://www.antigravity.tech*).

Flight Protection Map

The geographic information is available in the Antigravity app. View this information from the built-in map of the Antigravity app before each flight. You should confirm that the planned take-off spot is not within or adjacent to a flight protection area. Otherwise, you will not be able to fly your drone near the planned take-off spot. Users can also use the offline map function of the Vision Goggles to browse the location of these flight protection areas.

Flight Altitude and Distance Restriction

Flight Restriction

A flight restriction is set by default in order safeguard the safety of users and general public. This section will provide information about how to config the flight restriction.

You can set the flight altitude and distance restrictions from the Vision Goggles menu. Once you have completed the setting of the restriction values, a virtual cylinder that comprises flight altitude, distance, will be in effect to restrict where the drone can fly. If the GNSS system is not operational, the flight distance restriction is disabled, but only the flight altitude is restricted.

Flight Altitude and Flight Distance Restriction

· Strong GNSS Signal

The maximum altitude is the maximum height of the drone measured from the take off point, and the maximum distance determines the farthest flying distance of the drone from the Home point. Users can set these two values in the Vision Goggles.

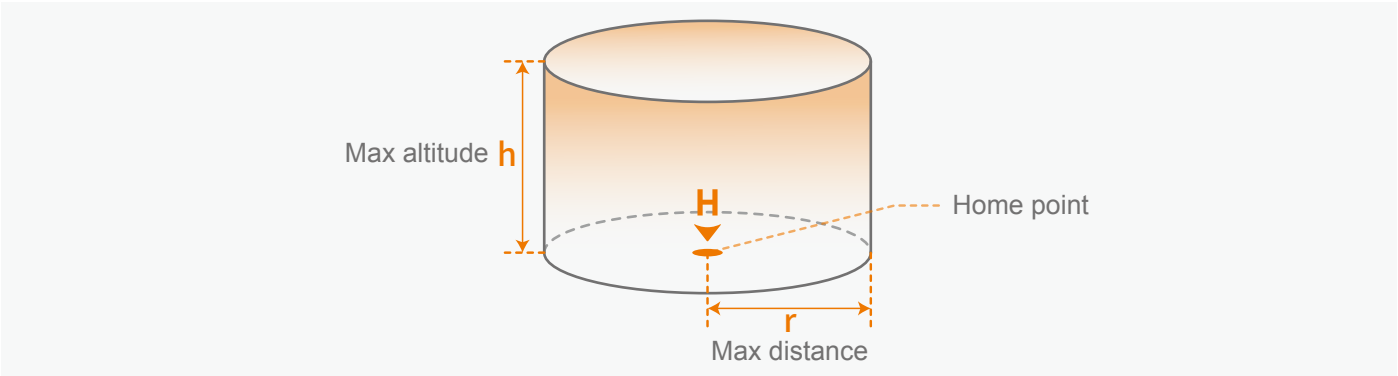

© 2025 Antigravity All Rights Reserved

· Weak GNSS Signal

The maximum altitude of the drone will be affected by factors such as ambient light, particularly when the GNSS signal is weak.

- When the ambient light is normal and the GNSS signal is strong, the maximum altitude is around 10 m (32 ft). In the event of the GNSS signal resuming to yellow (), the restriction on the flight altitude will be lifted.
- When the ambient light is dim and the GNSS signal is weak, the maximum altitude is around 2 m (6 ft). In the event of the GNSS signal resuming to white ( ), the restriction on the flight altitude will be lifted.

It is possible that the drone will fly beyond the restricted flight range due to inertia. The user can still control drones in this instance. However, you should control your drone to fly back into the safe area.

Flight Safety Best Practice

Follow the best practices below to avoid serious personal injury or causing property damage.

1. Ensure that you are not under the influence of anesthesia, alcohol, or drugs, and do not experience dizziness, fatigue, nausea, or any other conditions that may affect the safe operation of the drone.
2. When landing, first turn off the drone's power, then turn off the remote controller.
3. It is strictly prohibited to throw, launch, or otherwise project any dangerous payload towards any buildings, individuals, or animals to prevent personal injury or property damage.
4. Do not use a drone that has been involved in a collision, accident, or is in poor condition.
5. Ensure adequate training and establish emergency plans for emergencies or accidents.
6. Develop a flight plan and avoid reckless driving of the drone.
7. When using the filming function, respect the privacy of others and ensure compliance with local privacy laws, regulations, and ethical standards.
8. This product should only be used for general personal use, and not for any other purposes.
9. Do not use it for illegal or improper purposes, such as espionage, military operations, or unauthorized investigations.
10. Do not use this product to defame, insult, harass, track, threaten others, or in any other way infringe on the legitimate rights such as privacy rights and publicity rights of others.
11. Do not use the drone to trespass into others' private property.

- · Do not approach the rotating propellers or motors. Do not attempt to catch the drone while it is hovering in the air by hands, and do not attempt to hold the drone in the palm of your hand for takeoff or landing operations.
- · Before takeoff, ensure that all devices are fully charged and that there is no visual damage or cracks to the propellers.
- · Familiarize yourself with each flight mode by reading the official user documentation or watching videos tutorials, and understand the return-to-home procedure.
- · Upon receiving the low battery warning from the device, user shall immediately return the drone to its home point.
- · During automatic RTH, adjust the flight speed if required for a safe landing.
- · Ensure the connection between the Vision Goggles and the battery is secure at all times; otherwise, it may cause disruption while in use.

© 2025 Antigravity All Rights Reserved

RTH and Obstacle Avoidance Safety Notice

Return to Home (RTH)

- During the RTH, your drone will automatically adjust its flight speed to account for external factors such as wind speed and obstacles, making necessary changes of heading to navigate around obstacles on its flight path.
- The accuracy of the RTH is dependent on GNSS signal strength. Hence, if the GNSS signal is interfered with, your drone may not be able to fly back to its recorded Home point.
- If possible, only activate the RTH in an open area as the obstacle avoidance sensors cannot detect small objects like branches or power lines while the RTH is in process.
- Set the RTH altitude higher than all surrounding visible structures before the flight if there are power lines or tall towers along the RTH path.
- During the RTH process, the Home point, RTH altitude, and RTH behavior cannot be updated from the Vision Goggles. It is important to set appropriate RTH parameters before taking off your drone.
- If the refreshed maximum altitude is set below the current altitude during the RTH process, the drone will first descend to the newly set maximum altitude and then continue the flight.
- The RTH altitude cannot be changed during the RTH process.
- If there is a significant deviation between the current altitude and the preset RTH altitude, it is likely that the drone cannot accurately estimate the power consumption due to different wind speeds at different altitudes. Pay extra attention to the diminishing battery level and warning messages on the Vision Goggles in this scenario.
- In the RTH process, if the drone reaches the maximum flight altitude during ascent, the drone will stop ascending and return to the Home point at the current altitude. Pay attention to flight safety during the RTH process.
- If the recorded Home point is in a altitude restricted area but the drone is not in that area during the RTH, then when the drone entered the altitude restriction area, it will first descend to comply with altitude restriction, which may be lower than the pre-set RTH altitude. Fly with caution.
- During the RTH process, the drone will avoid any flight protection areas while flying forward. Fly with caution.
- The drone will abort the RTH if it fails to determine whether it is safe to fly when the surrounding area is too complex.
- Before each flight, set the appropriate RTH altitude based on the surrounding environment. Enter the settings menu on the Vision Goggles and set the RTH altitude. The default RTH altitude is 110 m (360 ft).
- If obstacle avoidance system become unavailable, it is advised that users to regain control and manually land the drone.
- Flight protection areas may affect the flight path of drone during the RTH. Avoid flying near flight protection areas.
- The drone may not be able to return to the Home point in the strong wind environment. Fly with caution.
- During the RTH, pay extra attention to small objects (such as branches or power lines) or transparent objects (such as water or glass). In emergency , abort the RTH and manually land the drone.

© 2025 Antigravity All Rights Reserved

Obstacle Avoidance Safety Notice

Be aware of the surroundings of the flight site at all times. Since the performance of the obstacle avoidance system is affected by ambient lights and other factors and cannot replace manual control and judgment, stay alert to the drone's movements during the flight. Do not solely rely on the obstacle avoidance feature when operating in the one of the scenarios (tree braces, power lines, water surface, after sunset).

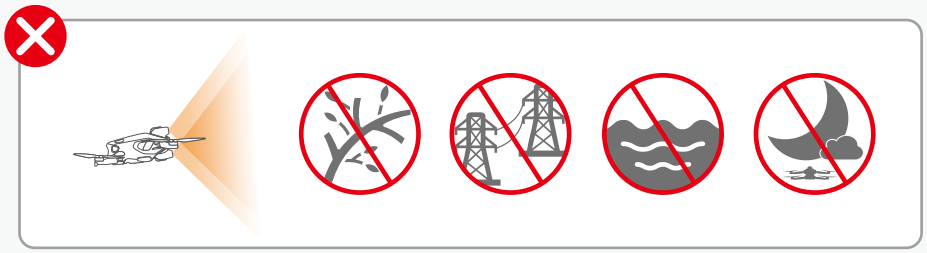

For more comprehensive information about the safety guidelines for using the obstacle avoidance feature. Refer to the ***"Obstacle Avoidance" on page 43***.

How to Control Your Drone

Basic Operations

Use the combination of ❶ throttle trigger, ❷ flight slider, ❸ 360 dial view, and ❹ emergency brake/RTH button on the Grip Motion Controller to control the attitude and flight speed of the drone, and adjust the orientation of the drone by swinging the Grip Motion Controller.

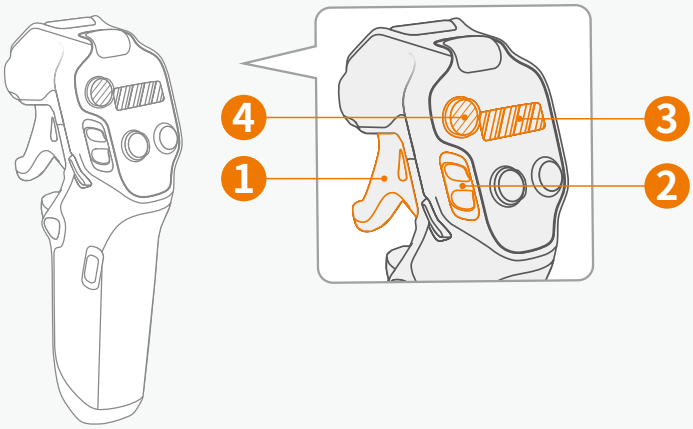

© 2025 Antigravity All Rights Reserved

Horizontal Flight

Use the throttle trigger on the Grip Motion Controller to control the drone's horizontal speed.

· When the throttle trigger is released, the drone hovers at the current altitude.

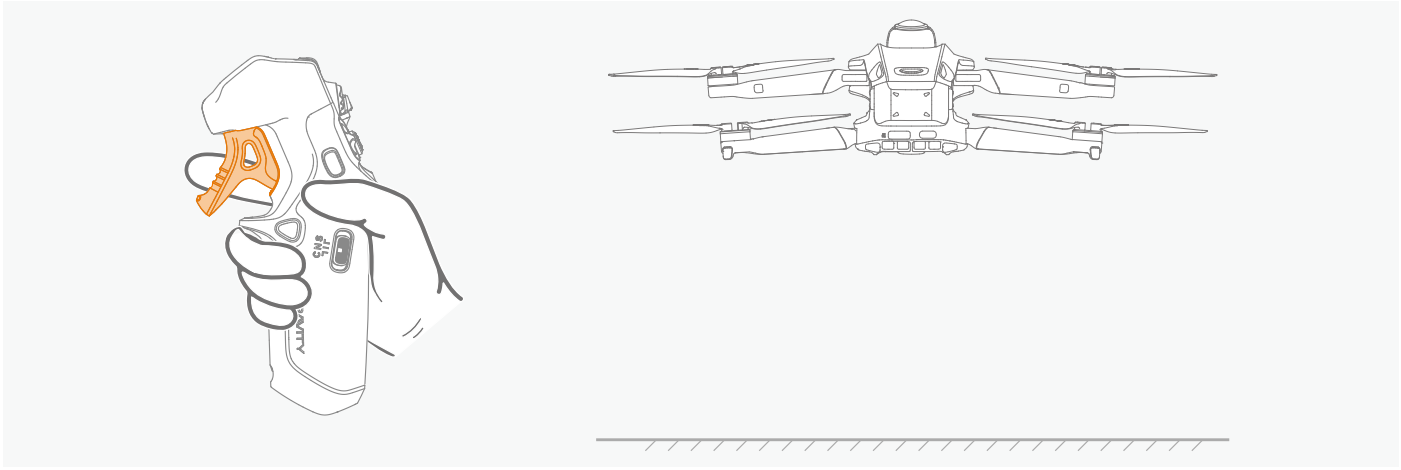

· Push throttle trigger inward will make the drone fly in the direction of the current heading. Greater throttle push allows for faster acceleration.



The Antigravity A1 drone does not fly backward.

Adjusting Heading of the Drone

Swinging your arm to the left or right controls the drone's heading in the Free Motion mode by default.

· Pressing the throttle trigger and swinging to the right will allow the drone fly forward to the right.

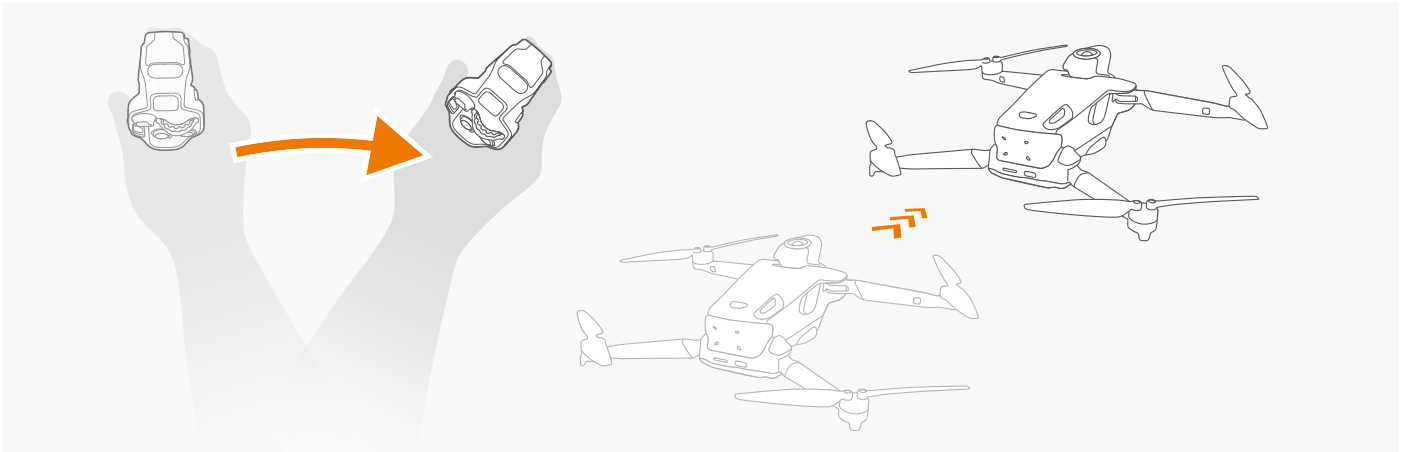

© 2025 Antigravity All Rights Reserved

· Pressing the throttle trigger and swinging to the left will allow the drone fly forward to the left.

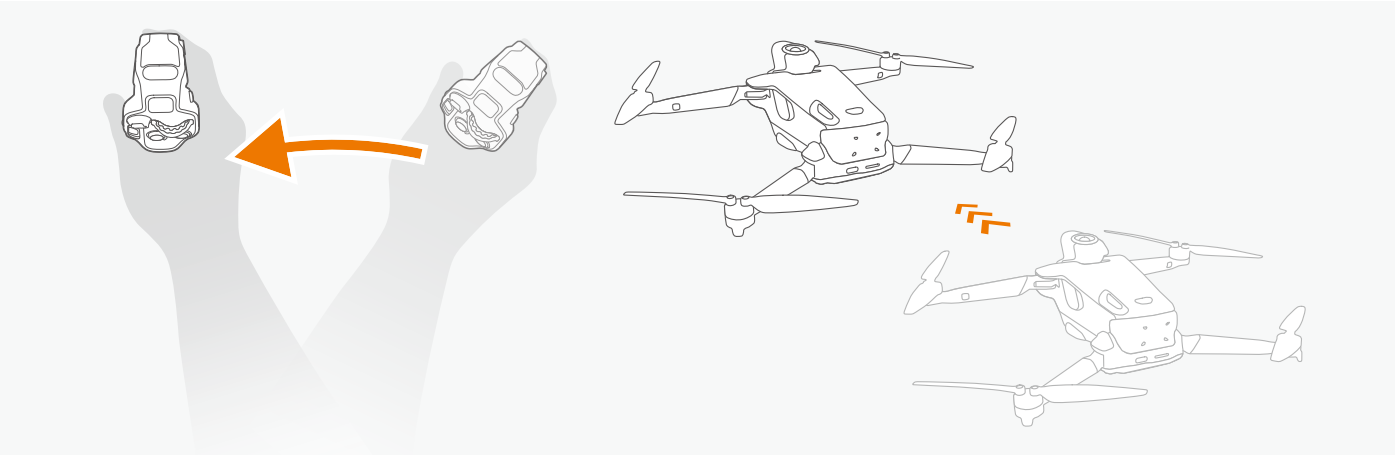

However, in the FPV mode, the heading of the drone is controlled by the rotation of the wrist rather than arm swing movement. For more information about the control modes, please refer to the section ***"Controlling in FPV Mode" on page 33***.

Climbing and Diving

· Using the wrist as the pivot, rotate the Grip Motion Controller clockwise toward the body to make the drone climb upwards.

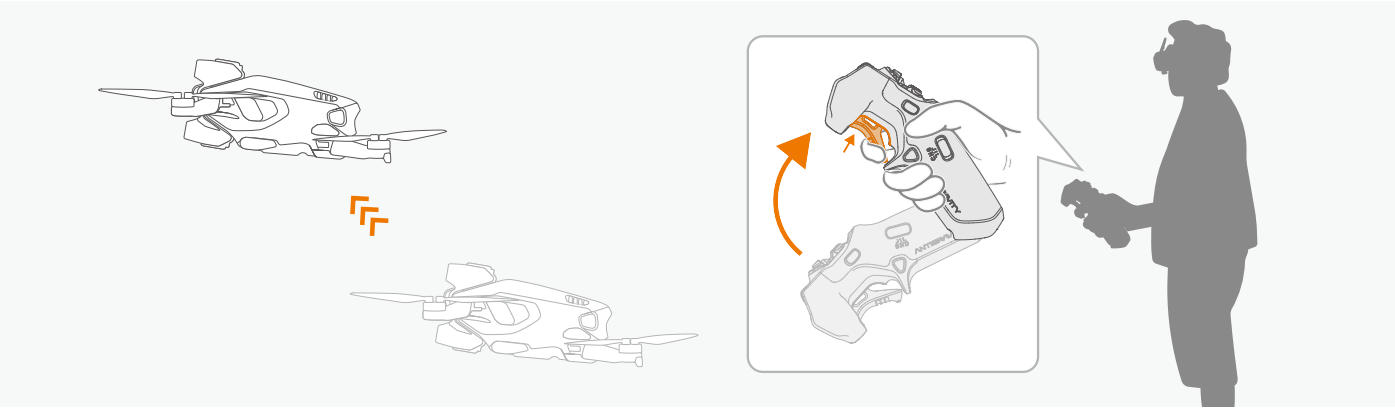

· Using the wrist as the pivot, rotate the Grip Motion Controller counterclockwise toward the body to make the drone dive downwards.

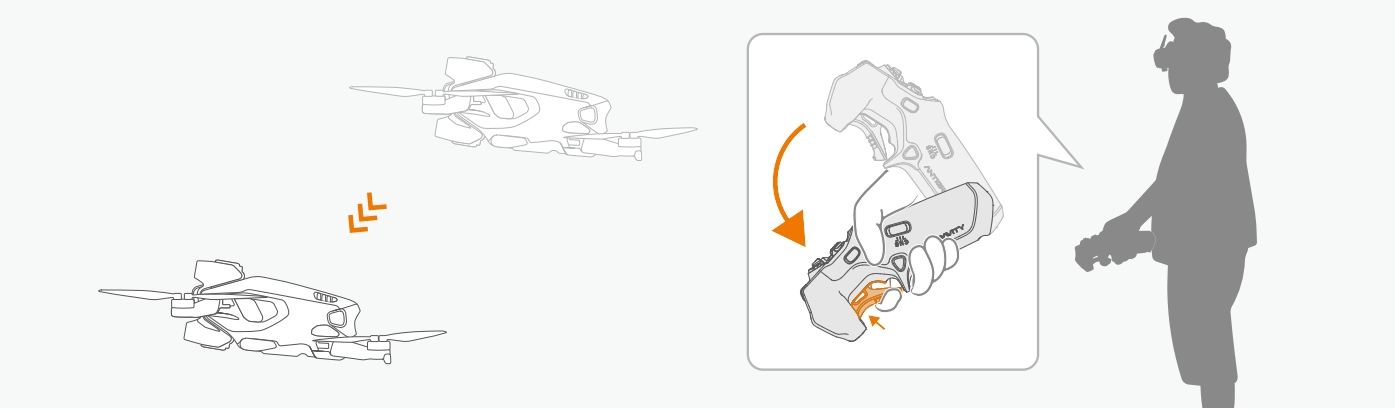

© 2025 Antigravity All Rights Reserved

Taking Off and Landing

Take off	· Push the flight slider in two short bursts to unlock the motors. The drone enters idle state with all four motors unlocked and is ready to take off. · Slowly push the flight slider upwards. The drone will start ascending and hover at 1.2 meters (3.9 feet).
Landing	Push the flight slider downwards to allow the drone to descend gradually.
Brake	Press once on the emergency brake / RTH button to halt the drone from continues its flight. Press and hold the same button again to resume the flight.

For safety, stop the drone before adjusting the fitting of your Vision Goggles during flight to prevent accidents.

Stopping the Motors Mid-air

During the flight, if you encountered an emergency situation (such as the drone becoming uncontrollable), users can trigger the mid-air motor stop by following button combinations:

1. First, press and hold the video recording button on the Grip Motion Controller.
2. While holding the video button, use the other hand to rapidly press the emergency brake/return-to-home (RTH) button four times.

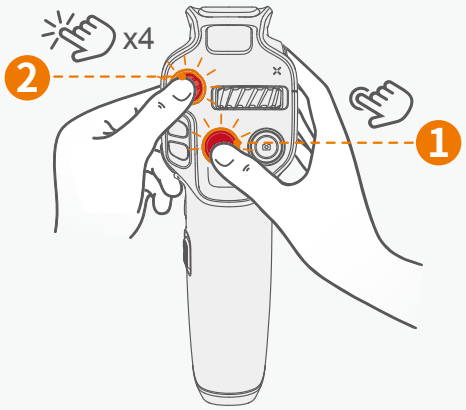

3. The motors will immediately shut down and the drone will fall from its current altitude. Be extra cautious when exercising this option.

To use the mid-air motor stop function, you must first enable this option in the Safety menu on the Vision Goggles.

© 2025 Antigravity All Rights Reserved

Controlling in Free Motion Mode

The Free Motion mode in the Vision Goggles allows for intuitive control of the drone using the Grip Motion Controller. In this mode, the movement of the Grip Motion Controller syncs with the navigation point in the Vision Goggles, directing the drone's heading. You can then observe a 360-degree free view during flight. When the viewpoint is independent from the flight direction, a small picture-in-picture (PIP)window will pop up in the Vision Goggles will display the front view of the drone.

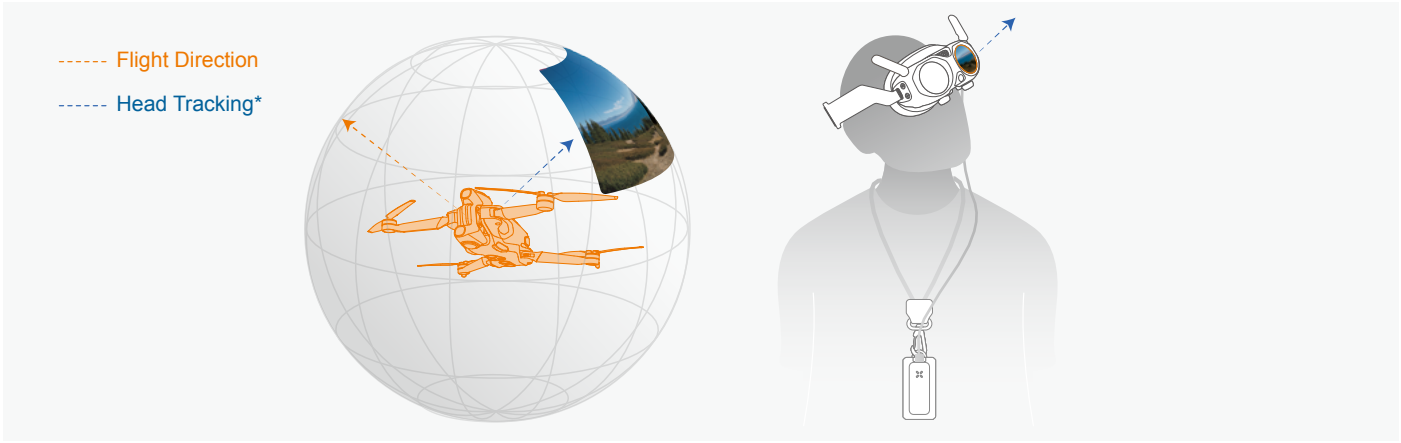

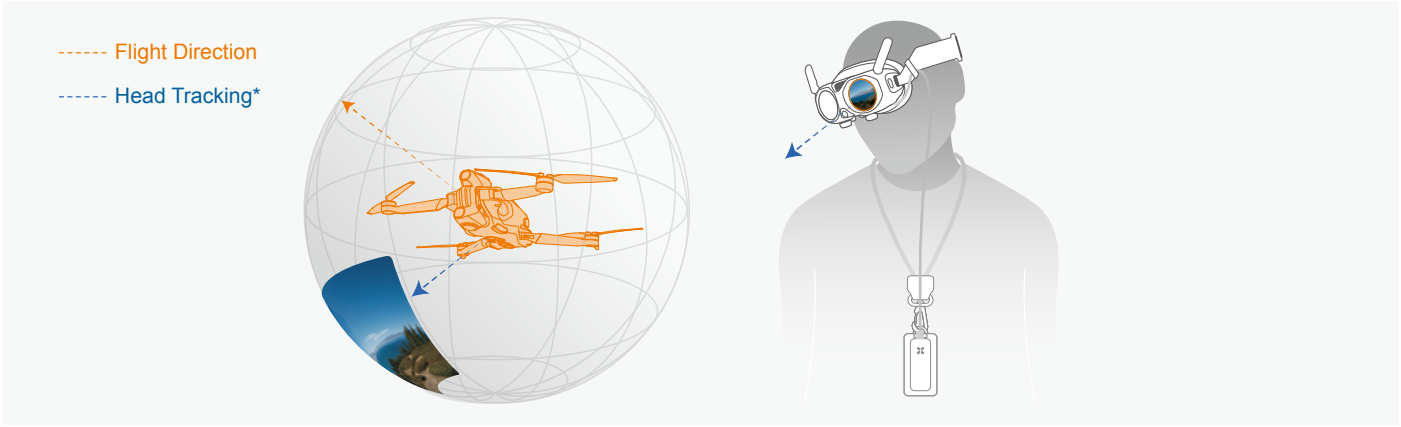

*Head tracking syncs live view with the head movements from user, and it is independent of drone's heading.

In the Free Motion mode, the drone's heading will move with the navigation point.

· Swing the motion controller to the left with the pressed throttle, the drone's heading will also turn to the left.

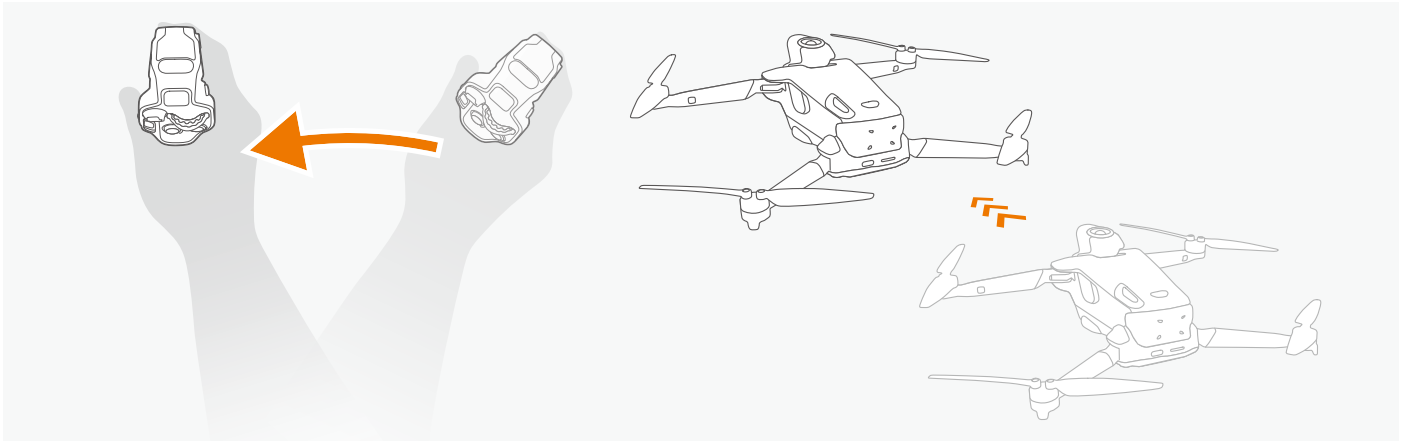

© 2025 Antigravity All Rights Reserved

· Tilt your arm upwards while press the throttle trigger, the drone will climb towards the navigation point.

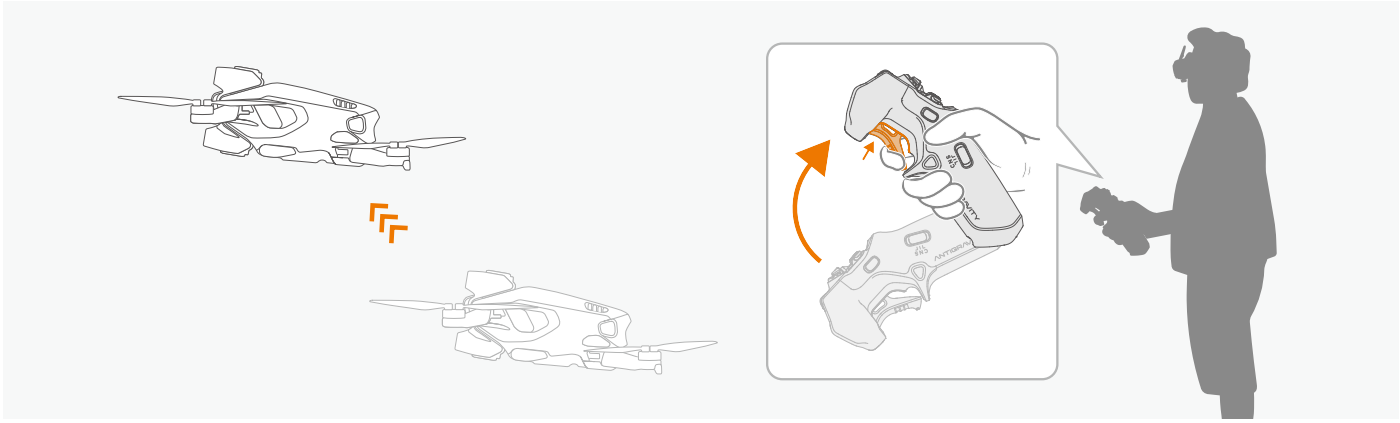

Controlling in FPV Mode

In FPV mode, the live view is aligned with the heading of the drone but not the head tracking perspectives. Turning your head will not result in a change of the heading of the drone. However, you can still perform a 360 panoramic view mid-flight. The biggest difference to Free Motion and FPV mode is the response to the wrist movements.

· Rotating your wrist counterclockwise will cause the drone to turn left.

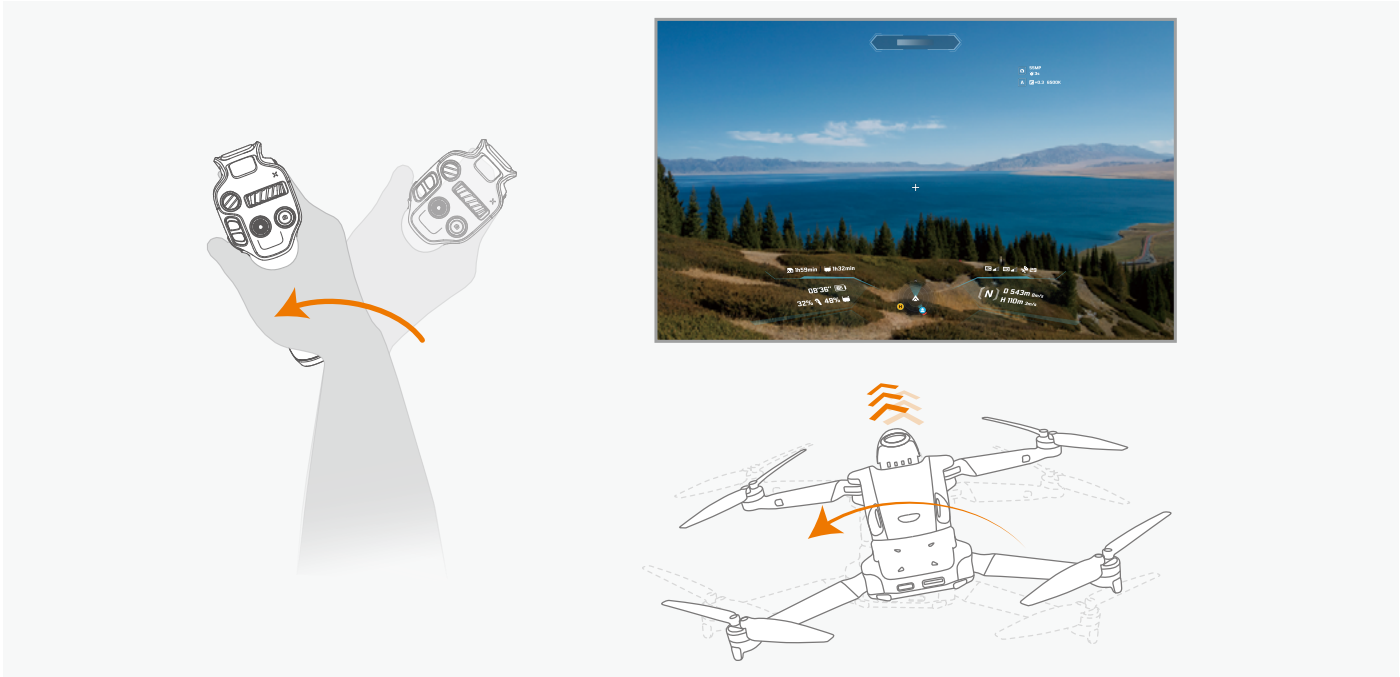

© 2025 Antigravity All Rights Reserved

· Rotating your wist clockwise will cause the drone to turn right.

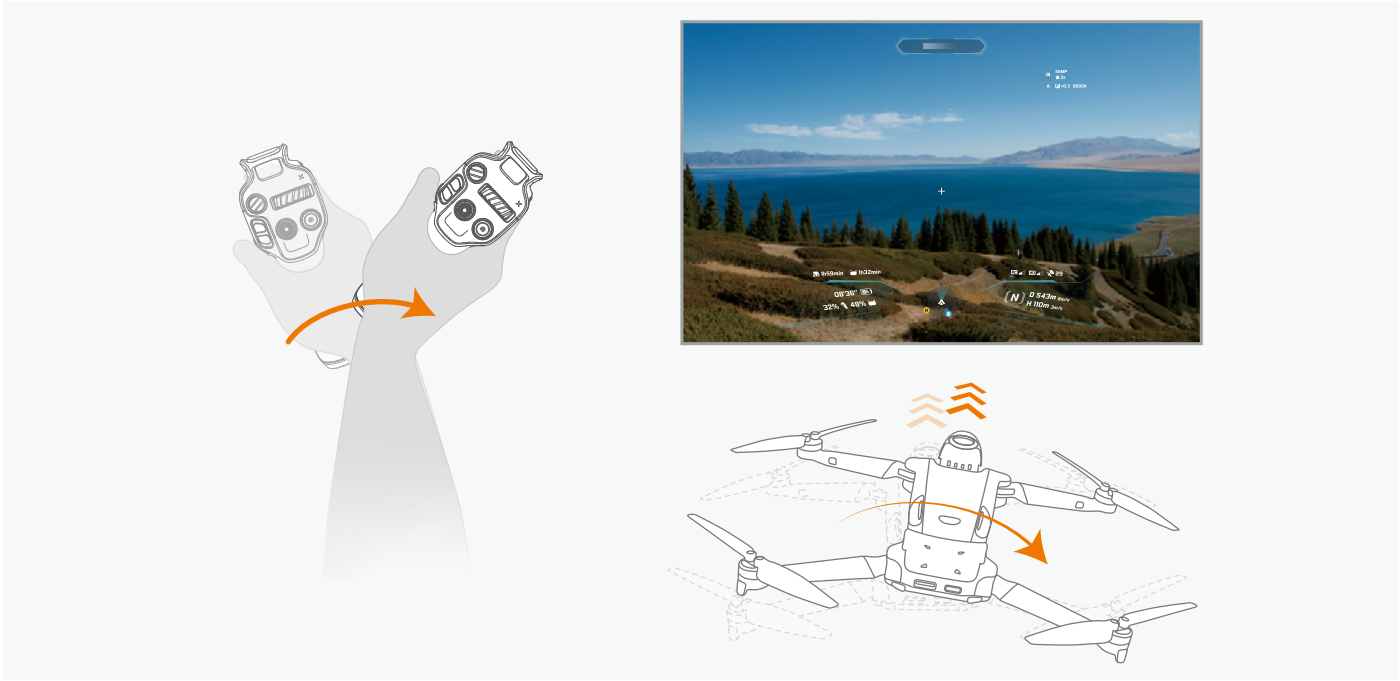

· In FPV mode, swinging your arms horizontally will not affect the heading of the your drone.

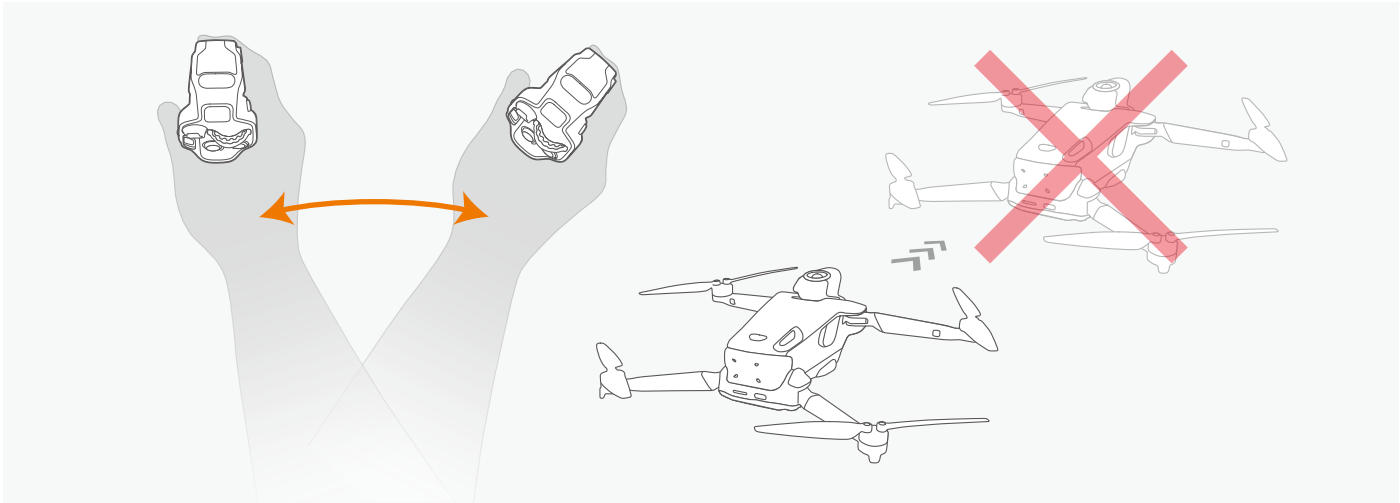

Switching Between Control Mode

To switch between the Free Motion and FPV mode, click on the icon at the top right of the Vision Goggles menu. The drone will automatically switch to Free Motion mode upon engaging the RTH procedure.

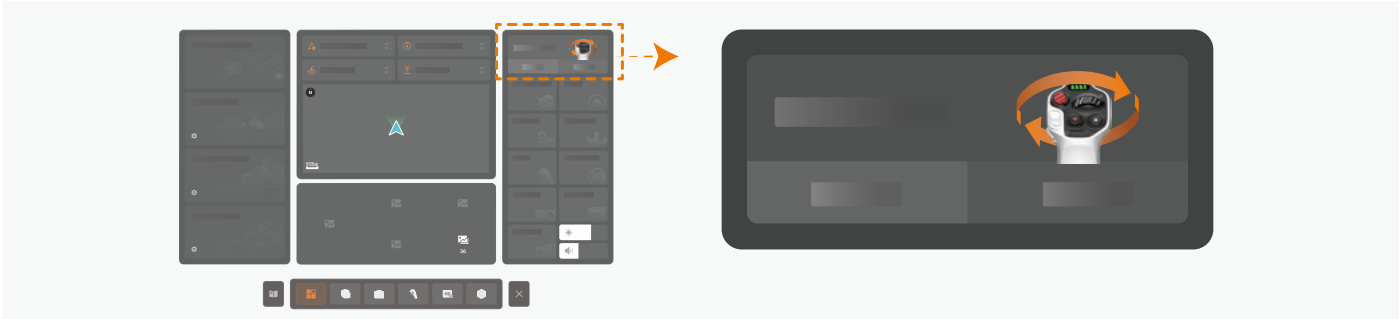

© 2025 Antigravity All Rights Reserved

A1 Drone

Flight Mode

The A1 drone offers three flight modes, which can be switched by toggling the button on the Grip Motion Controller. The differences between these three modes are listed as follows:

- **Normal (N) mode:** The drone hovers accurately and maintains stable flight, suitable for most flight scenarios.
- **Sport (S) mode:** The drone flies at its maximum horizontal speed, with enhanced flight performance.
- **Cinematic (C) mode:** The horizontal speed is reduced compared to Normal mode, making it more suitable for the professionals to capture smooth footage.

The location of the mode button is as follows, with the N mode set as default.

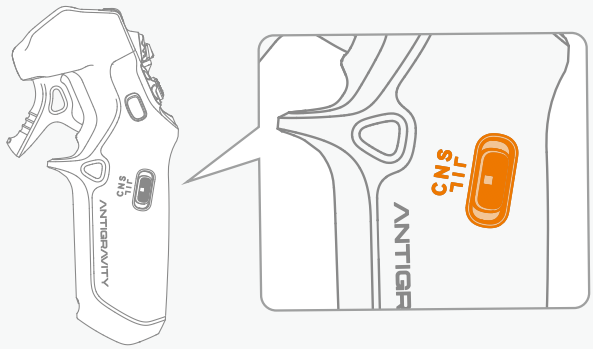

For information on the maximum speed in each of the flight modes, refer to the ***"Product Specification" on page 87*** in the appendix.

- Allow a minimum braking distance of 10 m (32.8 ft) for safety when flying in Sport or Normal mode in windless environment.
- In Sport mode, the drone's speed increases significantly compared to Normal mode, requiring a braking distance of at least 20 m (65 ft) in windless conditions for safety.
- The braking distance of your drone is affected by the flight altitude. When operating in high altitude[1] areas, allow for ample braking distance.
- In Sport mode, the drone's control sensitivity increases, so users should allow ample space for executing any maneuvers.
- In Sport mode, the obstacle avoidance system is turned off automatically due to the increased speed. Caution is advised.

When the vision system is unavailable or disabled, and the Global Navigation Satellite System (GNSS) signal is weak or the compass is interfered with, the drone will automatically switch to Attitude (ATTI) mode. In Attitude (ATTI) mode, the drone may be more susceptible to the influence of the surrounding environment. In this scenario, even a mild wind may cause the drone to drift, which is dangerous when flying indoors or in narrow spaces. It is recommended to land the drone immediately to avoid accidents when the drone in this mode.

[1] *With a high-capacity flight battery, high-altitude areas are defined as above 3000 meters. When equipped with a standard battery, high-altitude areas are defined as above 4000 meters.*

© 2025 Antigravity All Rights Reserved

Controlling Mode

FreeMotion Mode

In the FreeMotion mode, the navigation point is constantly tracking with the your movement or gestures, allowing the drone to sync its direction with the navigation point. This enables a 360-degree view during flight, with a PIP windows displaying the drone's front view. For more information, refer to ***"Controlling in Free Motion Mode" on page 32***.

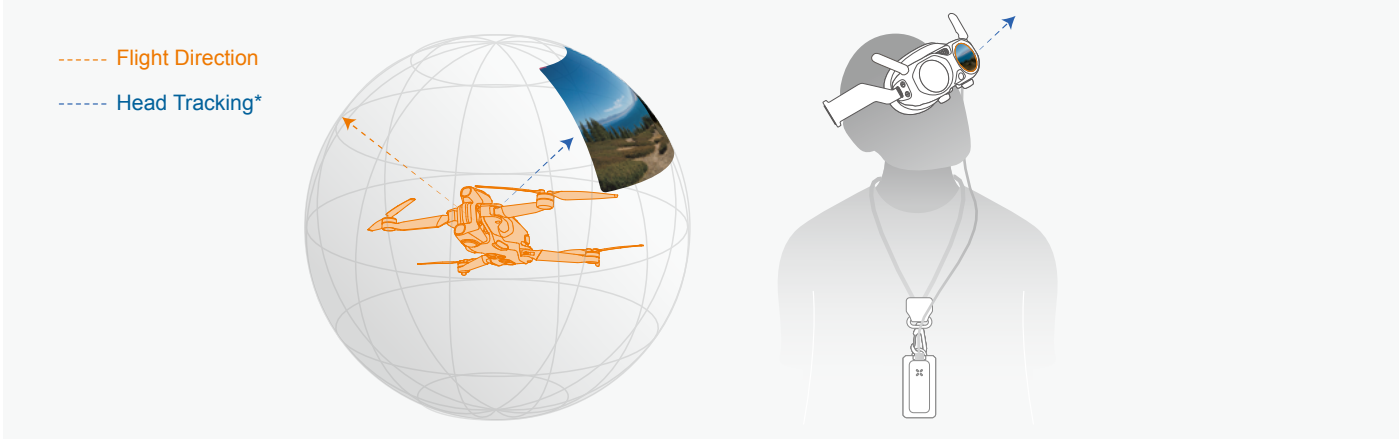

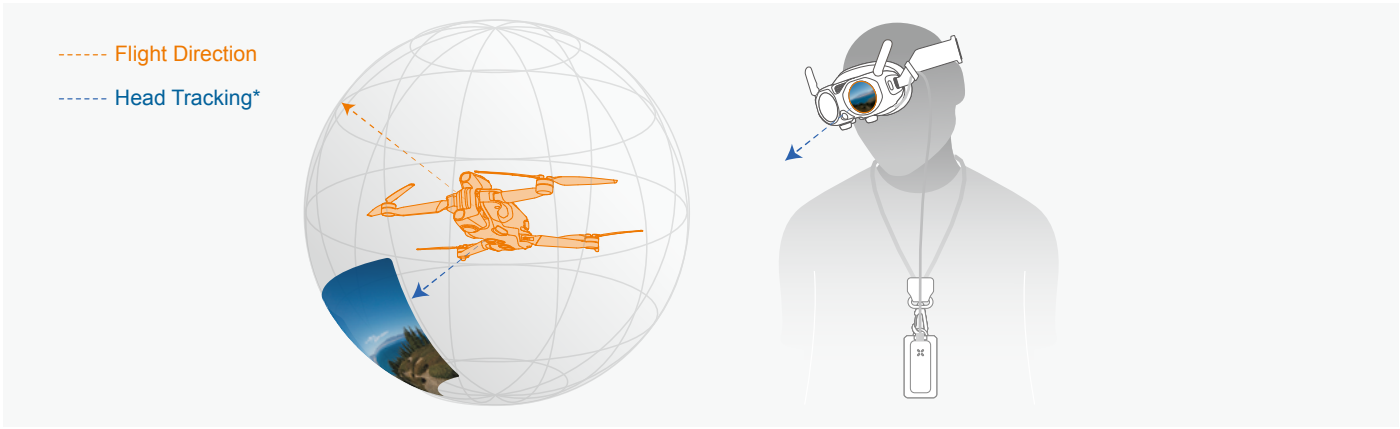

*Head tracking syncs live view with the head movements from user, and it is independent of drone's heading.

Flight Indicators

The flight indicators locate the rear of the A1 drone. Refer to the figure below:

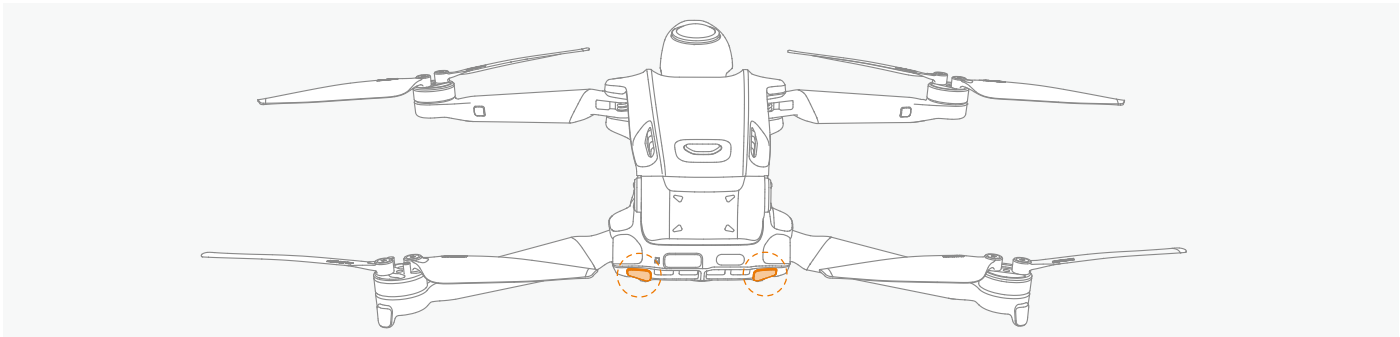

© 2025 Antigravity All Rights Reserved

Before Taking Off

After the drone's power is turned on and the motors are not yet started, the blinking flight indicator LED will show the current system status. Refer to the table below for the explanation of each blinking pattern.

General Status		
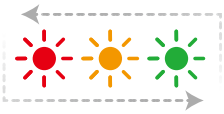	Alternating blinking of red, orange, and green LEDs	Drone self-check.
	Slow blinking of green LEDs	Strong GNSS signal detected. The drone is ready to take off.
	Slow burst of blinking green LEDs	No GNSS is available but only Vision sensing system is available. The drone is ready to take off.
	Alternating blinking of red and green LEDs	Motors are unlocked and the propellers start rotating. The drone is ready to take off.
	Rapid blinking of yellow	Connection signal lost between the drone and controller.
	Short burst of blinking yellow	Battery level low.
Critical Status		
	Blinking red LEDs	· System error detected. · Drone is in ATTI mode. (no GNSS signal detected and vision system is not available)
	Blink twice in red over a short burst.	Critical low battery level. Land your drone immediately.
	Solid red LEDs	Critical system error detected. Power on and off your drone.
Front Indicator	**Pattern**	**Drone Status**
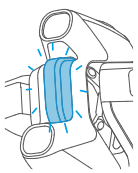	Blinking blue LED	Firmware update in progress.

© 2025 Antigravity All Rights Reserved

After Take-off

While the drone has taken off, the flight indicator at the front will start blinking green.

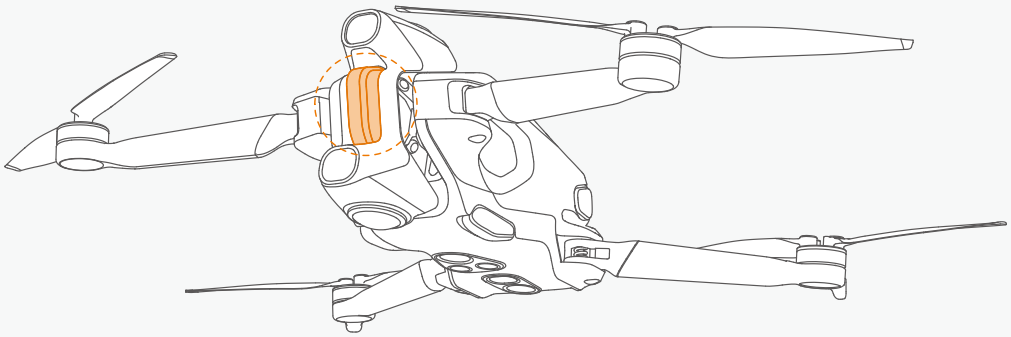

Flight Indicators at Rear	Pattern	Drone Status
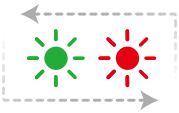	Alternating blinking of red and green LEDs	Normal. Drone is in flight.

Front Indicator	Pattern	Drone Status
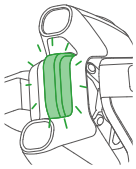	Slow blinking of green LED	Normal. Drone is in flight.

⚠ The blinking pattern of the flight indicator may vary by country or region. Please comply with local laws and regulations

Return to Home (RTH)

Introduction to RTH

The RTH function allows the drone to return to the last recorded home point on its own. There are three ways to initiate RTH: manual activation, low battery, or loss of control signal. If the drone has successfully recorded the home point and the GNSS is working properly, the drone will automatically return and land at the home point.

Home Point

Home point is defined as the location where a strong to medium GNSS signal strength (represented by a white icon) is received. So long as the signal strength remains stable before takeoff, the Home point can be refreshed. However, If the signal is weak, the Home point will not be updated.

GNSS Signal		White icon denotes strong GNSS signal, the Home point is recorded and can be updated.
		Red icon denotes weak GNSS signal, the Home point cannot be recorded or updated.

© 2025 Antigravity All Rights Reserved

It can be either automatically or manually updated when the GNSS signal is normal.

Home Point

Caution: If the drone is adjacent to, or within a flight protection area, the Home point cannot be refreshed or recorded.

RTH Process Breakdown

1. Home point is successfully recorded.
2. Start RTH. Activating the RTH can be set in the RTH settings.

- The RTH can be triggered by the following use cases:
  - Manually initiating RTH
  - Automatically when the control signal is lost between the drone and controller.
  - Automatically triggered when the battery level is critically low.
- The default RTH behavior is return to the Home point, however, it can also be set as hover.

3. During RTH, users can abort the RTH flight by short-pressing the RTH button on the Grip Motion Controller.

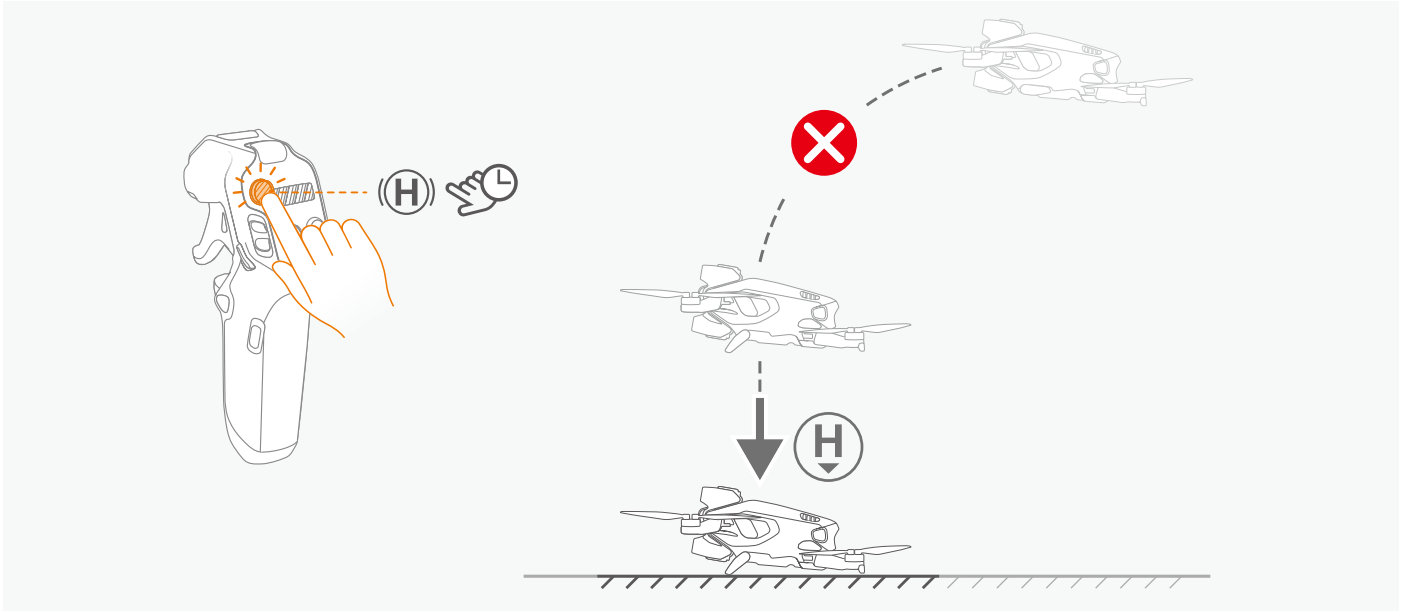

4. When the drone is in the horizontal RTH phase, users can pull the throttle trigger to accelerate the drone and guide the drone quickly to the safe landing area.
5. The flight altitude is crucial for correctly guiding the drone back, so the drone will adjust its flight altitude based on its distance from the Home point:

- When the drone is less than 5 m (16 ft) from the Home point, the drone will land from its current altitude.
- If the drone is within 5 to 50 m (16 ft to 164 ft) from the Home point, it will return at the current flight altitude. If the RTH altitude is less than 3 m (9 ft), the drone will first climb to 3 m (9 ft) before flying to the Home point.
- If the drone is more than 50 m (164 ft) from the Home point and its current altitude is lower than the preset RTH altitude, it will first climb to the preset RTH altitude before flying back. If the current altitude is already higher than the preset RTH altitude, it will fly back at the current altitude.

© 2025 Antigravity All Rights Reserved

6. During the RTH process, users can view the drone's flight path on the mini-map in the Vision Goggles.



7. During the RTH process, a green AR flight path will be projected on the Vision Goggles, indicating the estimated flight path from the current position to the Home point. Users can utilize the flight path to identify if there are high rises or obstacles on the RTH flight path, and regain control of the drone if necessary.



When obstacle avoidance is enabled, the drone will analyze real-time data during the RTH flight and select the safest flight path. It will automatically adjust its heading and navigate around the obstacle if possible, ensuring a secure and reliable return.

8. Upon reaching the Home point, the drone will land automatically and the motors will stop.

© 2025 Antigravity All Rights Reserved

Manually Initiating RTH

During the flight, users can initiate the return to home function by long-pressing the emergency brake/return button.

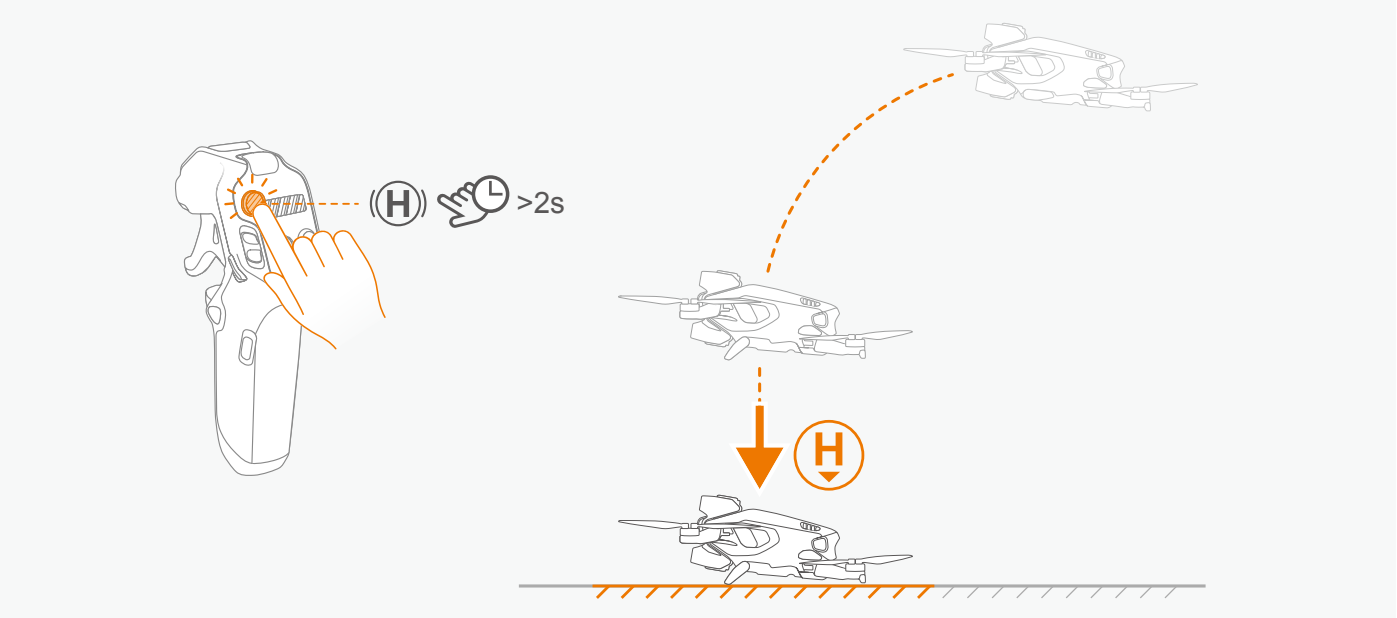

RTH Triggered by Low Battery Level

1. To prevent the drone from being unable to return to a safe location due to low battery power, if the drone detects that the current battery level is insufficient to fly back to the Home point, the drone will automatically trigger the RTH on its own.
2. During the flight, the drone will analyze in real time whether the current battery level supports a safe return. If it detects that the remaining mileage is not sufficient to return to the home point, it will issue a low battery countdown reminder and initiate a 10-second countdown. If there is no user action within the 10-second countdown, the drone will return automatically.
3. If the drone detects that the remaining mileage is not sufficient to support the landing, it will issue a critical low battery countdown reminder on the Vision Goggles and initiate a 10-second countdown. If there is no user action within the 10-second countdown, the drone will land from the current position automatically.

- In strong wind conditions, the estimation of remaining flight distance may be affected.
- If the current status of the drone does not support the estimation of remaining flight distance (e.g., no home point, battery communication abnormality, no GNSS signal), the estimation of remaining flight distance will be invalid, and users need to pay attention to flight distance and battery level.
- Users can still use the Grip Controller to guide the drone towards an appropriate landing site during the automatic landing.

RTH Triggered by Loss of Signal

When the video transmission signal of the Vision Goggles or the Grip Motion Controller is lost, if the Home point has been successfully set, then the RTH process be activated automatically if the signal loss timeout occurs.

- If the Lost Connection Behavior is set to “Hover,” the drone will hover when the RTH is triggered and remain hovering until the battery is depleted. When the low battery RTH is triggered, the drone will return to its Home point automatically. The user can regain control of the drone if necessary.

© 2025 Antigravity All Rights Reserved

RTH Flight Maneuver Strategies

The following flight maneuvers will be carried out when the RTH is activated either manually or automatically. The purpose of such maneuvers is to maximize the chance of avoiding obstacles on the flight path for the RTH, so that your drone will return to the Home point safely.

· Activate Path Seeking

Should the drone found itself in an narrow and complex environment that prevents it from engaging a safe return to the Home point. The drone will attempt to maneuver itself to an open area to proceed with the RTH procedure.

· Flight Path Back Track

If the RTH is triggered due to the loss of control signals, the drone will adjust its flight course and back track the flight distance of 90 meters, and then start returning to the Home Point at the pre-set RTH altitude.

· RTH Altitude Automatic Adjustment

During the RTH, the drone will try to automatically avoid obstacles. If the drone senses there is an obstacle on the flight path, the drone will automatically climb up in order to by pass the obstacle and then resume its flight path. If the drone detects an obstacle underneath, it will also adjust its flight altitudes.

⚠ The above mentioned altitude adjustments will only be activated when in an ideal light conditions.

· RTH in Flight Protection Areas

If the RTH flight path crosses a flight protection area, the drone will attempt to by pass and circumvent the flight protection area and continue its RTH flight path.

⚠ By-pass the flight protection areas will increase the RTH flight distance, which may affect the safe return of your drone. In order to maximizing the chance bring your drone back to the Home point, stay away from the flight protection areas.

RTH Risk Notice

⚠
- In strong wind conditions, the estimation of remaining flight distance may be affected.
- If the current status of the drone does not support the estimation of remaining flight distance (e.g., no home point, battery communication abnormality, no GNSS signal), the estimation of remaining flight distance will be invalid, and users need to pay attention to flight distance and battery level.
- When triggering RTH in a low-lit environment, the performance of the obstacle avoidance system will be significantly degraded, and the drone may not be able to sense obstacles on the flight path. Users should exercise caution and be prepared to take control of the drone when necessary.

© 2025 Antigravity All Rights Reserved

Obstacle Avoidance and Landing

Obstacle Avoidance Overview

The drone is equipped with a dual-camera vision system for forward and downward sensing, providing multi-directional obstacle avoidance support for its flight.

- **Direction:** The drone has obstacle avoidance capability in the forward and downward directions. The forward obstacle avoidance system detects obstacles in front of the drone to ensure safety during forward flight; the downward obstacle avoidance system is used to detect obstacles beneath the drone, assisting in avoiding ground or other objects during take-off, landing, and low-altitude flight.
- **Forward :** The effective distance of forward obstacle avoidance varies in different scenarios and conditions. Generally, the forward ranging distance is between 0.5 meters and 18 meters.
- **Downward:** The downward ranging distance is between 0.3 meters and 7.5 meters, effectively detecting obstacles below the drone to ensure the safety of low-altitude flight.

Obstacle Avoidance

The obstacle avoidance feature relies on multiple systems such as the vision system and infrared sensing system on the drone. Users must understand safety precautions when using this function. Observe the following practice when using the obstacle avoidance feature.

- Be aware of the surroundings of the flight site at all times. Since the performance of the obstacle avoidance system is affected by ambient lights and other factors and cannot replace manual control and judgment, stay alert to the drone's movements during the flight.
- When the GNSS signal is weak, the drone is flying at 0.5 to 10 meters (1.6 to 32.8 feet). The downward vision system works best in this range. If the drone flies higher than 10 meters (32.8 feet), vision positioning may be degraded. Fly with caution.
- In dimly lit environments, even with the landing light turned on, the vision system may still not achieve optimal performance, hence the user should fly with caution.
- When flying near the water surface, the downward vision sensor system may not work properly. This could make it challenging to avoid the water surface during landing. It is important to maintain control of the drone, assess the surroundings, and not rely too much on the vision system for stabilization.
- The vision sensors cannot identify large structures with frames and wires, such as tower cranes, high-voltage transmission towers, high-voltage power lines, cable-stayed bridges, and suspension bridges. Do not operate near these structures.
- The vision sensors may not work effectively near surfaces with no distinct patterns, or in areas with low or high lighting. Exercise caution when operating your drone in the following scenarios:
  a. Flying over the monochrome surfaces.
  b. Flying over the highly reflective surfaces.
  c. Hovering or fly over the water or transparent surfaces.
  d. Landing on the moving surfaces or objects.
  e. Flying over areas with drastic changes in light.
  f. Flying over extremely dark or bright surfaces.
  g. Flying over reflective surfaces or surfaces that absorb infrared waves, such as mirrors.
  h. Flying over surfaces with no distinct pattern or texture.
  i. Flying over surfaces with repetitive identical patterns or textures, such as tiled designs.
  j. Flying into obstacles with small reflective surfaces, such as branches or power lines.
- Keep the camera and sensors clean. Keep the lenses away from scratches. Do not attempt to modify the lenses. Do not use the drone in dusty or humid environments.
- Do not fly on rainy or foggy days, or when low visibility conditions.

© 2025 Antigravity All Rights Reserved

- Before each takeoff, ensure to check the following items:
  a. Make sure there are no stickers or stains on the sensors of the infrared and vision systems.
  b. Clean the sensors of the vision and infrared system. Remove any residue such as dirt, dust, or water. Use a dry cloth for cleaning and avoid alcohol-based lotions as a cleaning agent.
- Remain vigilant and fly with caution when operating your drone at night, as the vision system is not available in low light conditions and the drone may not be able to avoid obstacles or hover with precision.

Enabling Obstacle Avoidance

The obstacle avoidance function is enabled by default and it can be manually disable in the Safety settings at the bottom of the menu in the Vision Goggles.

- The obstacle avoidance function's performance is affected by flight speed. Obstacle avoidance works only in C mode or N mode but not in S mode, so exercise caution when flying in S mode.
- The drone will no longer detect obstacles when in manual flight or during executing flight routes, if you disabled obstacle avoidance. You must navigate the drone to avoid obstacle manually.

When obstacle avoidance is turned off, the following icon will appear in the bottom right corner of the Vision Goggles interface:  . Be caution when this icon is in red or in blinking pattern.

Obstacle Avoidance Action

The default obstacle avoidance action for the drone is to brake and hover when obstacles are detected.

Propeller Guards

Installing a propeller guard protects your drone from damages and significantly reduces the risk of accidents. Please follow the instructions below to install the propeller guard.

- The installation of propeller guards increases the drone's Maximum Takeoff Mass (MTOM). This change will affect flight performance, battery life, and image stitching parameters. Users should exercise caution when operating the drone.
- After installation,the users must recalibrate the stitching settings in the Antigravity app and official video editing tool to ensure optimal visual effects. Visit the official website for details.

Installing the Propeller Guards

1. Unlock the latches on the propeller guards.

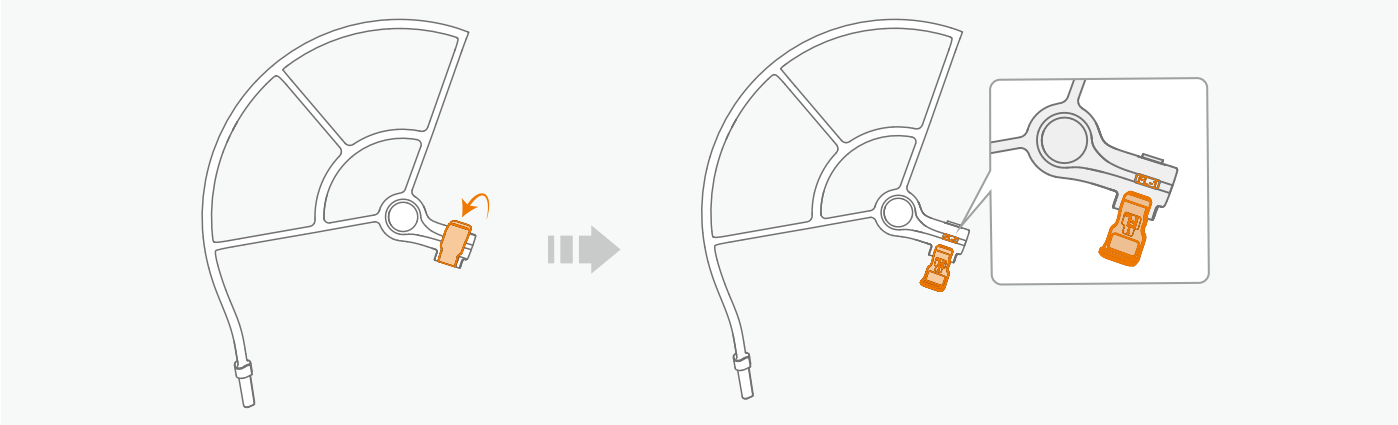

© 2025 Antigravity All Rights Reserved

2. The propeller guards are distinguished by front (F), back (B), left (L), and right (R). Be sure to assemble the components with the corresponding numbers together. The pairing of the components are displayed below:

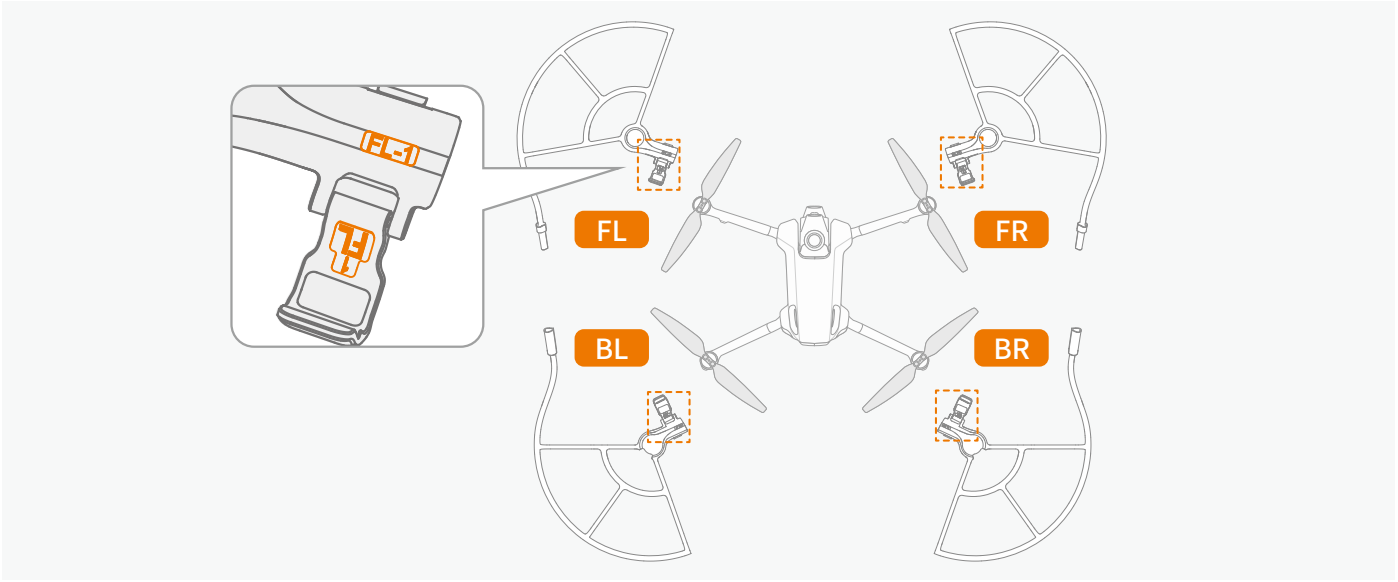

3. Connect the front and back propeller guards using the markers located around the latches.

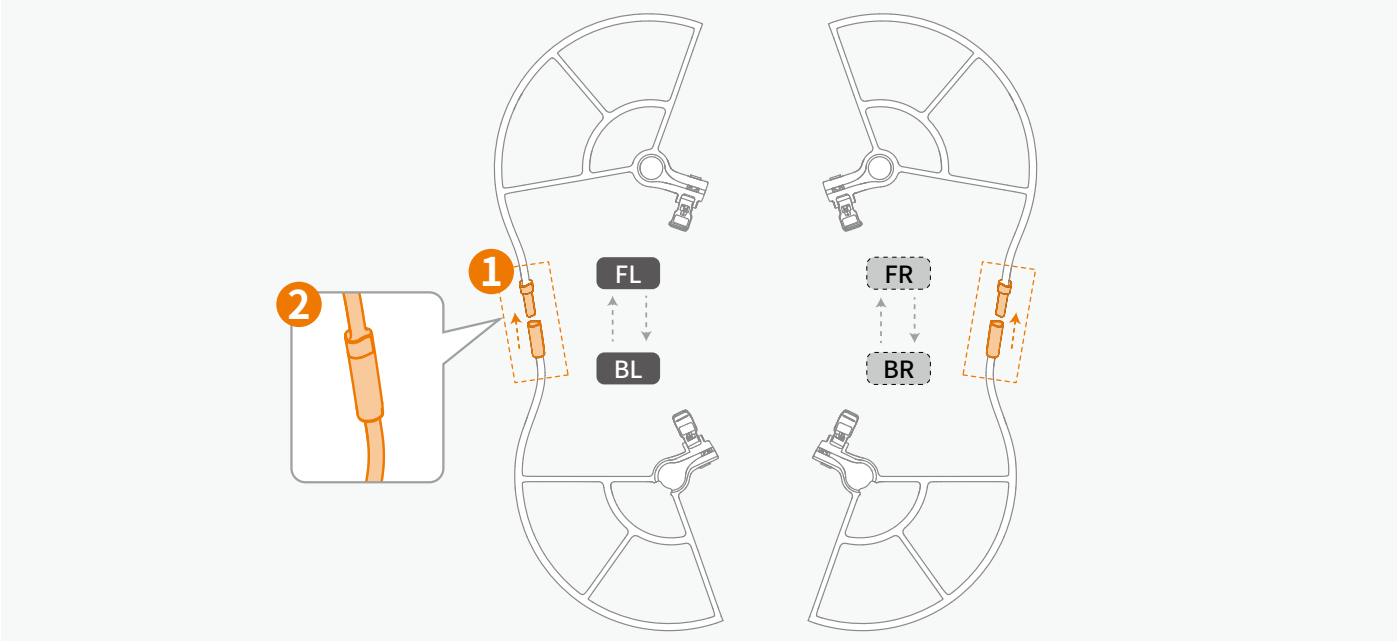

4. Attach the connected propeller guards onto the drone and lock the latches.

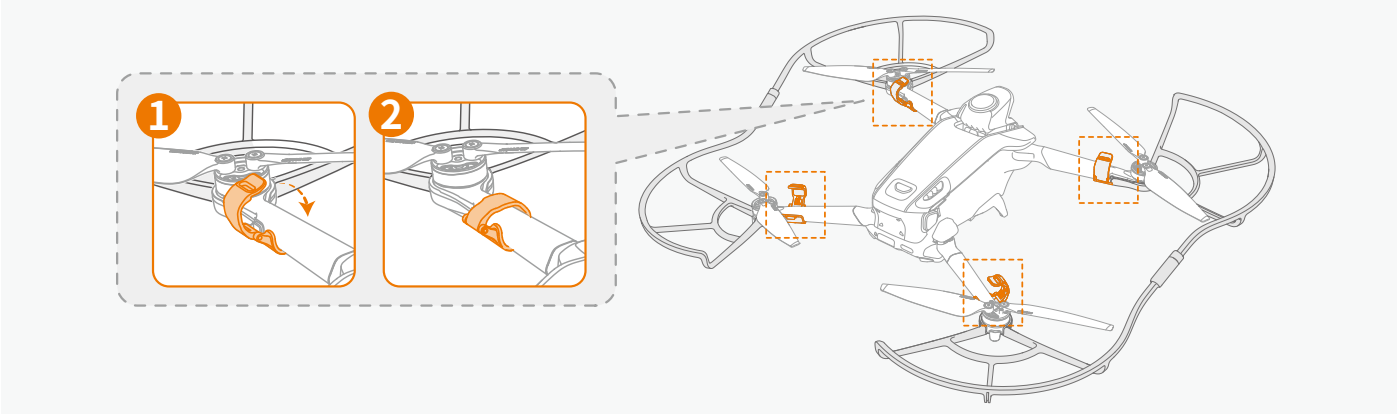

© 2025 Antigravity All Rights Reserved

Propellers

Propellers are damage-prone and must be inspected for any damage after each flight. Users should regularly check and replace them as necessary. The following section will describe how to replace propellers on drones.

How to Replace Propellers

- Discard the propellers set and the screws from the corresponding motor, do not reuse. When replacing the new propellers set, use the propellers from the identical package.
- DO NOT mix with the propellers from other packages.

1. Remove the screws (M 1.2 × 2) from the motor by using the supplied screwdriver from the bundle.

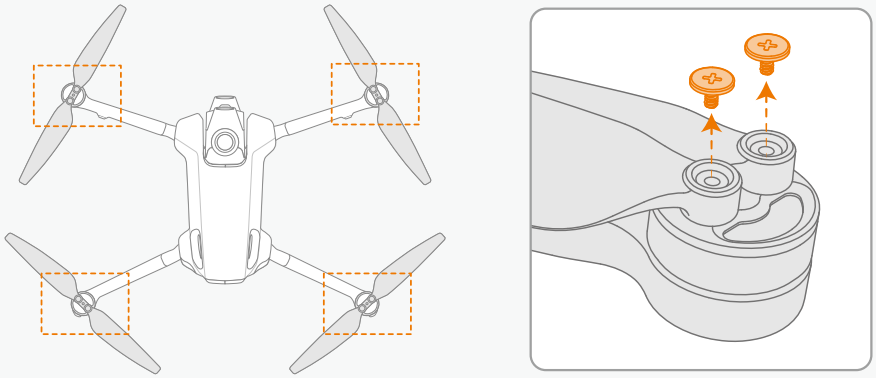

2. Discard the legacy screws and propellers. Do not reuse.
3. Identify the markers on the propellers that match the appropriate motors. Refer to the figure below.

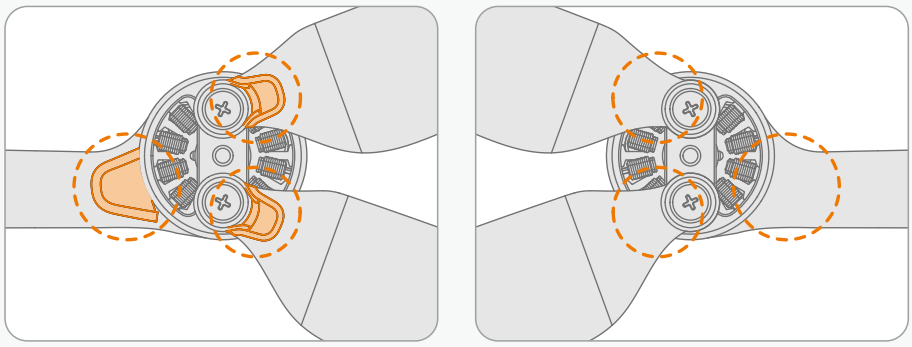

4. Mount the marked propellers onto the motors with the marker, and the unmarked propellers onto the unmarked motors. Apply the specified torque when tightening the screws.

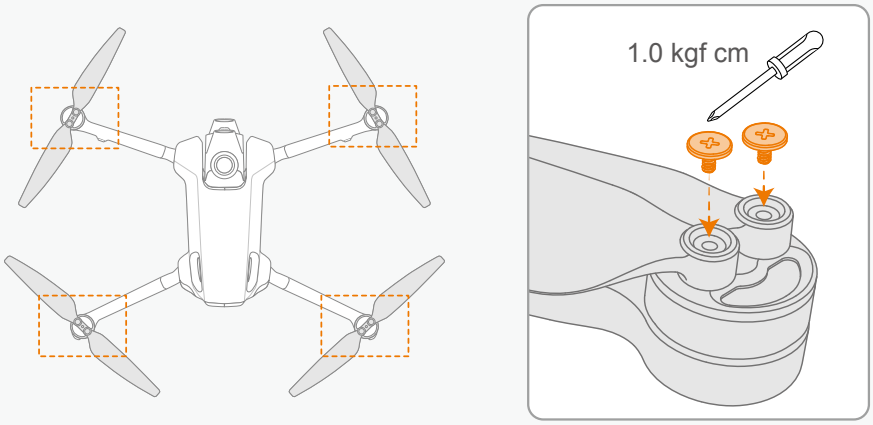

© 2025 Antigravity All Rights Reserved

Flight Battery

Safety Notice for Flight Battery

- Do not expose batteries to moisture, as this may lead to combustion or explosion. If the battery comes into contact with liquid, immediately remove it from the aircraft, place it in a safe, open area, and contact technical support for assistance.
- Use of unsupported batteries is strictly prohibited. Always use the included charger for the best results.
- Do not use batteries that are swollen, leaking, or have damaged packaging.
- Avoid using batteries in high-temperature environments, as this may lead to battery ignition or explosion. In low-temperature environments, performance may be affected, and caution is advised.
- Do not pierce the battery packaging.
- The battery electrolyte is highly corrosive. In case of leakage, avoid direct contact. If skin comes into contact with leaked fluid, immediately rinse with plenty of water and seek medical attention.
- Ensure batteries are stored out of reach of children. If a child accidentally swallows any part, seek medical attention immediately.
- Do not reuse batteries that have fallen from a height, been exposed to water, or sustained visible damage.
- In the event of a battery fire, extinguish it in the following order:
  a. If the battery is charging, disconnect it from the charger.
  b. Cover the battery with sand or a fire blanket.
  c. Move flammable items away from a battery that is on fire.
  d. Extinguish the flames with a fire extinguisher, then call emergency responders.
  e. Use fire-resistant tongs to place the battery into a non-flammable container filled with water to prevent re-ignition.
- After the aircraft lands, allow the battery to cool down before charging to prevent issues.
- Do not place batteries near heat sources, such as inside vehicles on hot days, in direct sunlight, or near open flames.
- Charge the battery to at least 60% before long-term storage. Charge it to 60% every three months during storage to prevent over-discharge.
- Do not place batteries in fire or hot stoves, and do not subject them to mechanical squeezing or cutting.
- Do not expose the battery to extreme heat environments as it may cause the battery to explode or leak flammable liquids and gases
- Do not expose the battery to extreme low air pressure environments as it may cause the battery to explode or leak flammable liquids and gases.

© 2025 Antigravity All Rights Reserved

Activation of the Flight Battery

The battery is in sleep mode upon the delivery. You must activate it before the first use. Follow one of the two approaches to activate the battery.

Using the Charger to Activate

Insert the battery into the battery compartment of the drone, then connect the drone to the power source. The LED indicators of the battery will flash green upon successful activation.

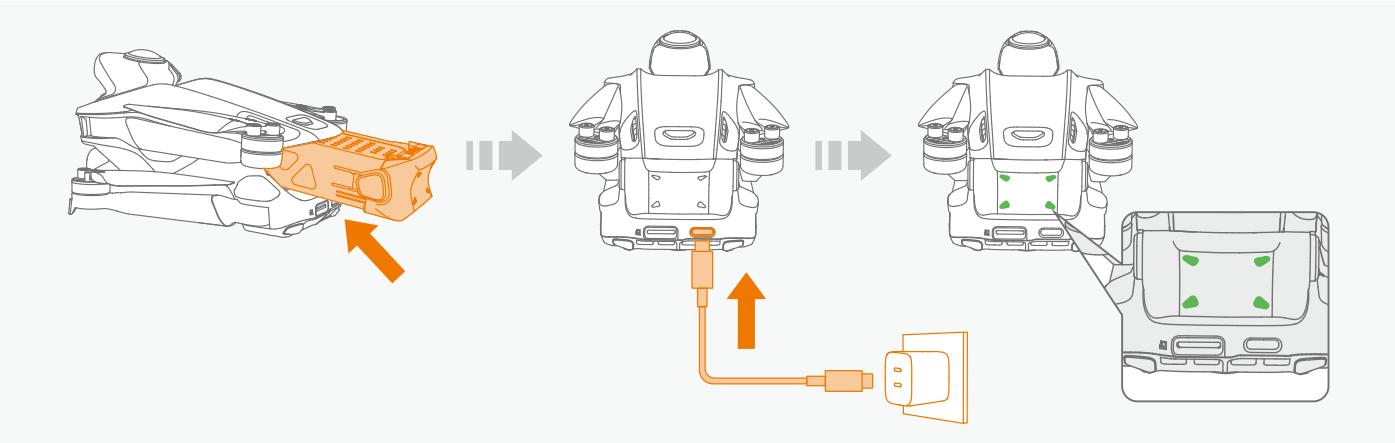

Using the Antigravity A1 Charging Hub to Activate

Connect the charging hub to the power source, insert the battery into one of the slots. The LED indicators of the battery will flash green upon successful activation.

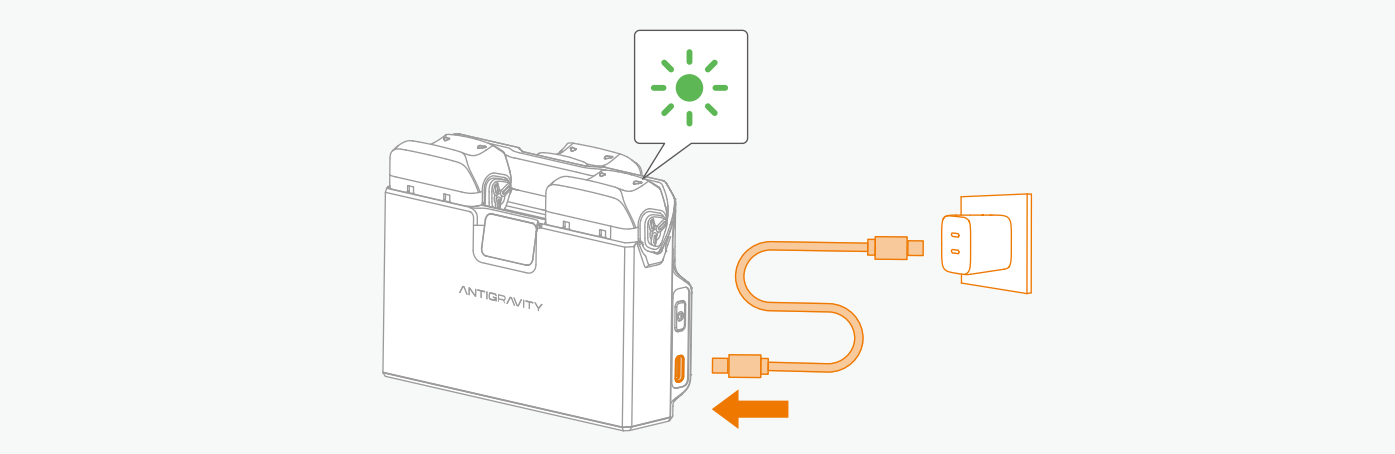

Using the Flight Battery

Installing and Removing the Battery

Insert the flight battery into the battery compartment of the drone. Make sure the battery is fully inserted and hear a click, indicating that the battery latch is securely fastened.

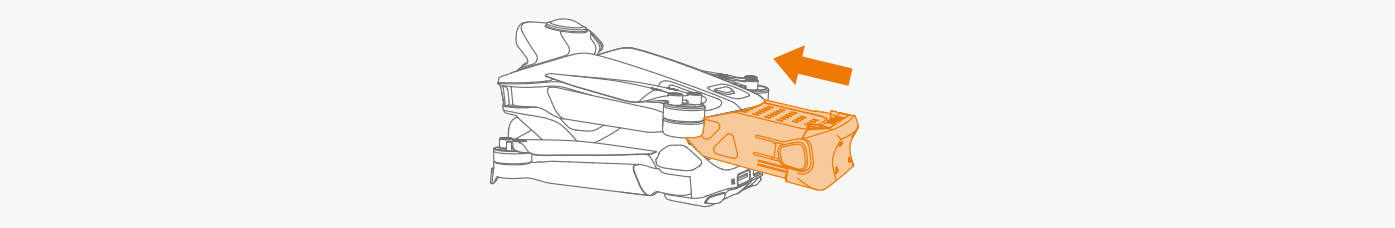

© 2025 Antigravity All Rights Reserved

Press the battery latch on both sides of the battery, and remove the battery from the battery compartment.

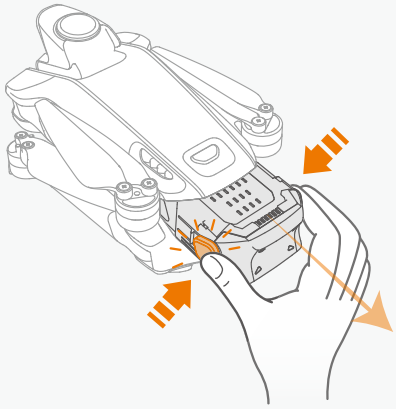

- Do not insert or remove the battery while the drone is powered on.
- Ensure you hear a click when inserting the battery. Do not remove the flight battery if not securely installed to avoid poor contact with the drone and potential danger.

Power On and Off

Press the power button on the drone once, then hold for two seconds to turn the drone on or off. When the drone is on, the battery level LED on the flight battery touch area will indicate the battery level. When the drone is off, the battery LED lights will turn off.

Data integrity of the flight recorder may be compromised if you do not follow the instructions to power off the drone.

Flight Battery Firmware

Insert the battery into the drone, power on all three devices and launch the Antigravity App. Follow the in-app instructions to update the firmware if new firmware is available.

The table shows the LED blinking pattern during the firmware update.

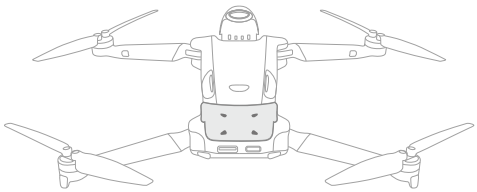

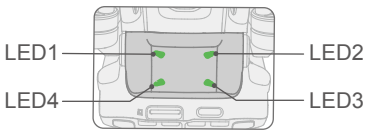

LED Blinking Pattern	LED1	LED2	LED3	LED4	Firmware Update Status
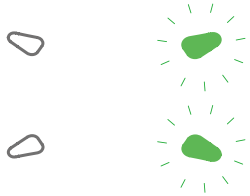	◎	◉	◉	◎	Downloading new firmware.
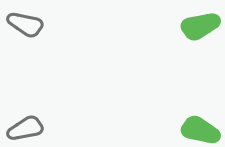	◎	●	●	◎	Firmware update failed.

© 2025 Antigravity All Rights Reserved

If the firmware update fails, insert the flight battery into the drone again and power it on. Retry the firmware update from the Antigravity App.

Charging the Flight Battery

Use the supplied charger or the Antigravity A1 Charging Hub to charge the battery. Follow these steps below to complete charging.

Using Charger

1. Ensure the battery is firmly inserted into the drone.
2. Connect the charger with appropriate adapter plug.
3. Attach the charger to the charging port of the drone.

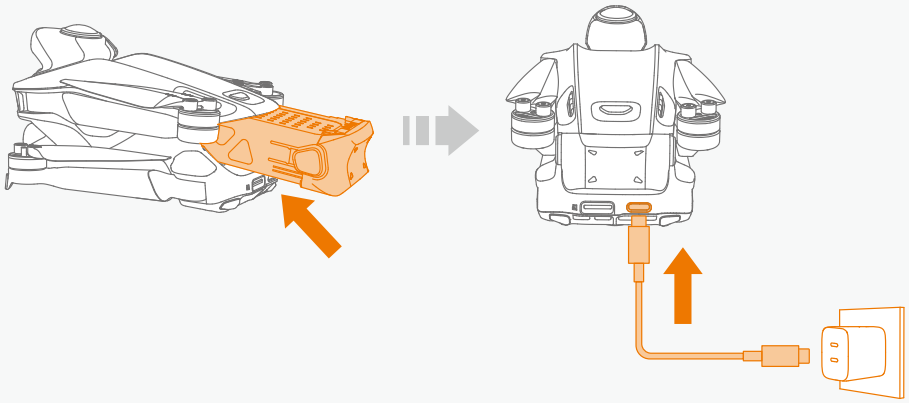

4. The LED indicator blinks in sequence when charging. Press once on the power button of the drone to check the current battery level.
5. The LED indicator turns off after charging completes.

Using Antigravity A1 Charging Hub

For instructions on how to charge with the A1 Charing Hub. Refer to ***"Battery Charging Hub" on page 51***.

Battery Level Indicator

Tap once on the touch panel to check the battery level.

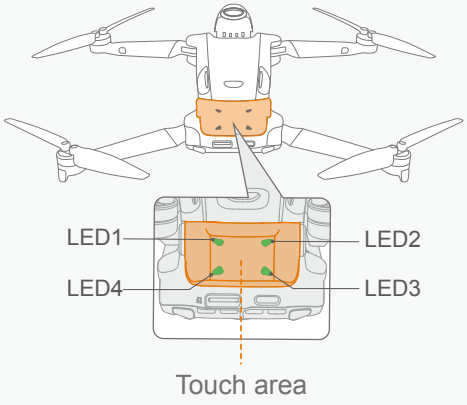

© 2025 Antigravity All Rights Reserved

The blinking pattern of the battery LED indicators and corresponding battery levels are listed below:

LED1	LED2	LED3	LED4	Battery Level
●	●	●	●	88% - 100%
●	●	●	◉	76% - 87%
●	●	●	◎	63% - 75%
●	●	◉	◎	51% - 62%
●	●	◎	◎	38% - 50%
●	◉	◎	◎	26% - 37%
●	◎	◎	◎	13% - 25%
◉	◎	◎	◎	0% - 12%

LED Legends Definitions:

● LED indicators flash solid green ◉ LED indicators flash green ◎ LED indicators is off

Battery Charging Hub

Battery Charging Hub Overview

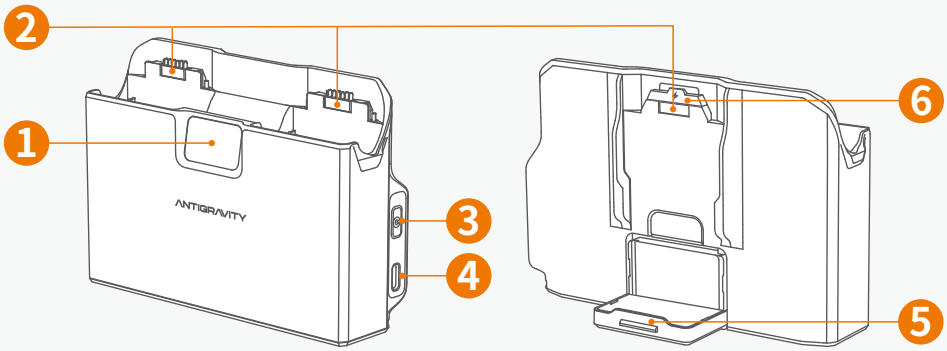

Item	Description	Function
1	Status Display	Display of battery level and system status of the Battery Charging Hub.
2	Battery Slot	Compatible with Standard and High-Capacity Flight Batteries.
3	Function Button	Press once to check battery level; Press and hold to activate Smart Power Pooling mode.
4	USB Type-C Port	It is recommended to use the Antigravity 65W GaN fast charger, or another fast charger that supports USB PD or PPS protocols, to ensure optimal performance.
5	Battery Bracket	Flipped up when not in use.
6	Protection Cap	Attached during the transportation. Store in a safe place for future access.

© 2025 Antigravity All Rights Reserved

Regular Charging

1. Press the button to fold down the battery bracket. This allows for charging three batteries at the same time. Remove the protection cap and store it in a safe place.

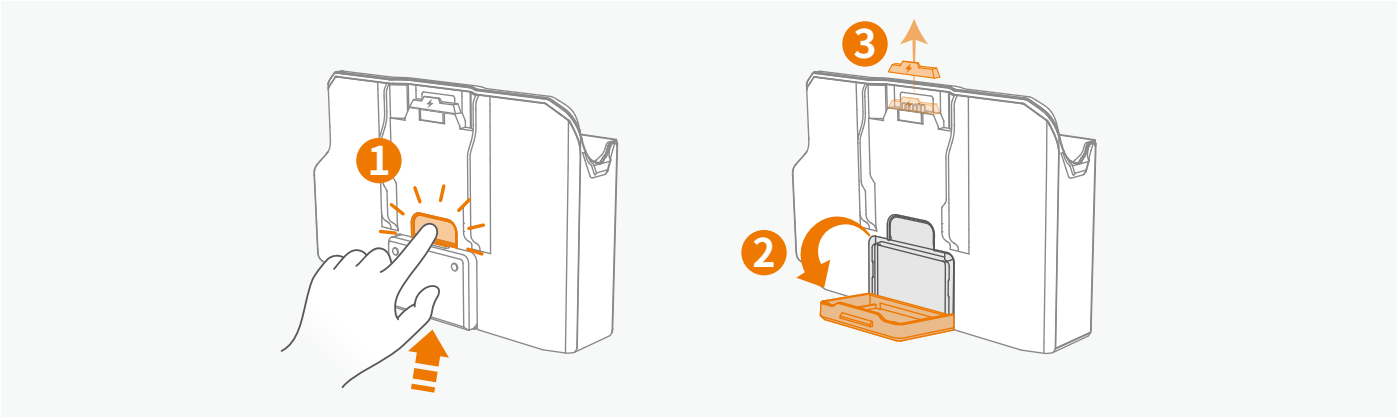

2. Insert the flight battery into the designated slots of the Battery Charging Hub until it clicks into place.

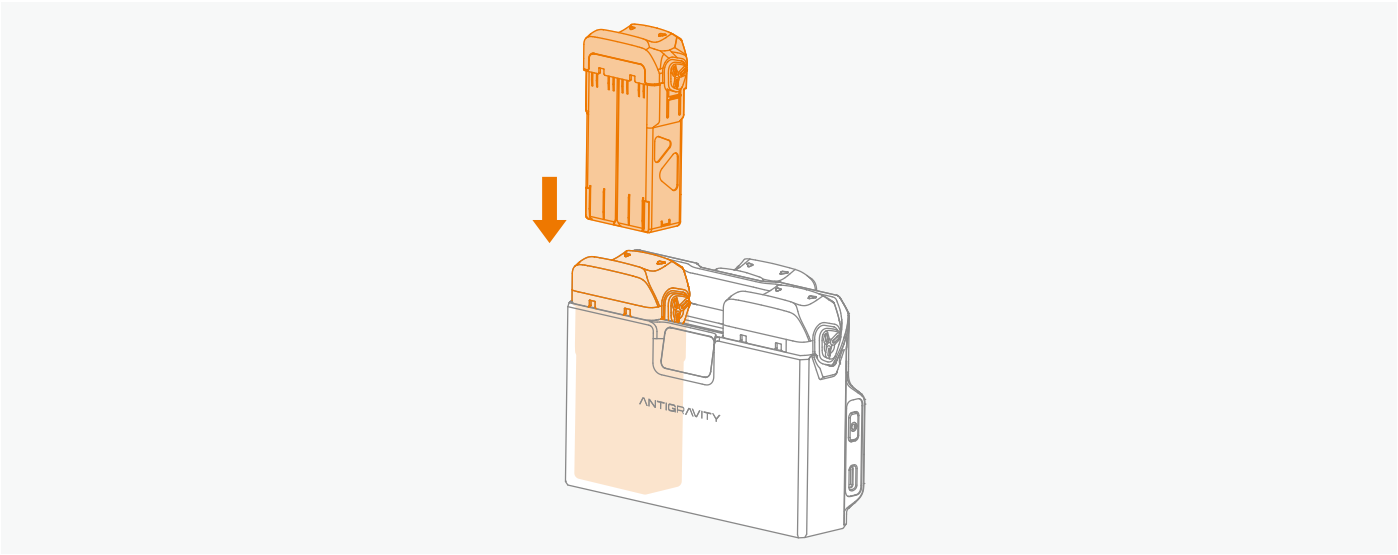

Be aware of pinching when inserting the battery.

3. Connect the Charging Hub to an AC power source using the supplied USB Type-C cable. The hub charges the batteries in sequence based on their remaining power, and the status display panel indicates their charge levels during charging.

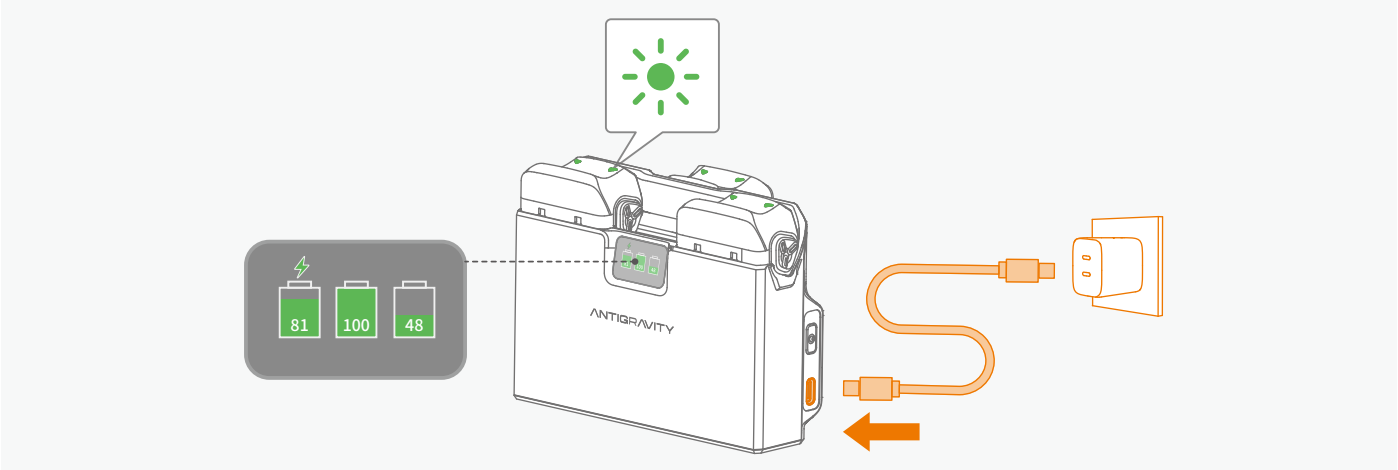

© 2025 Antigravity All Rights Reserved

4. When charging is complete, the status LED on the drone battery stops blinking and turns off. Pinch and hold the clips on the top of the battery to remove it.

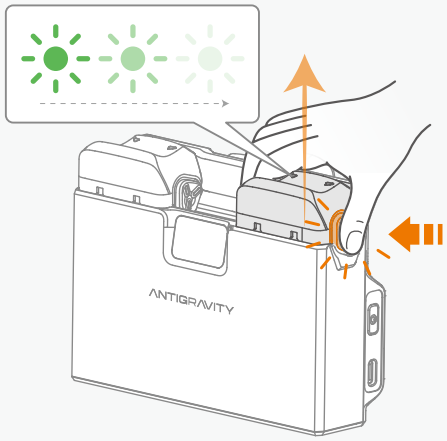

Smart Power Pooling

1. Insert two or more flight batteries into each slot of the Battery Charging Hub until it clicks into place.

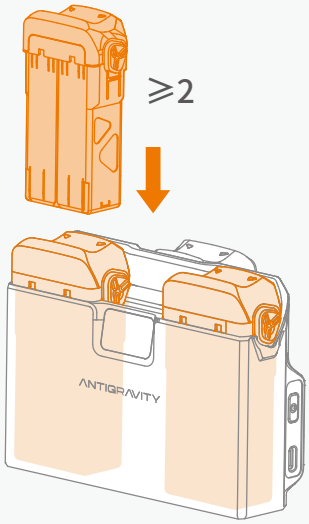

Be aware of pinching when inserting the battery.

2. Press and hold the Function Button on the Charging Hub to activate Smart Power Pooling. Once enabled, the status panel displays low-power batteries transferring charge to the highest-capacity battery.

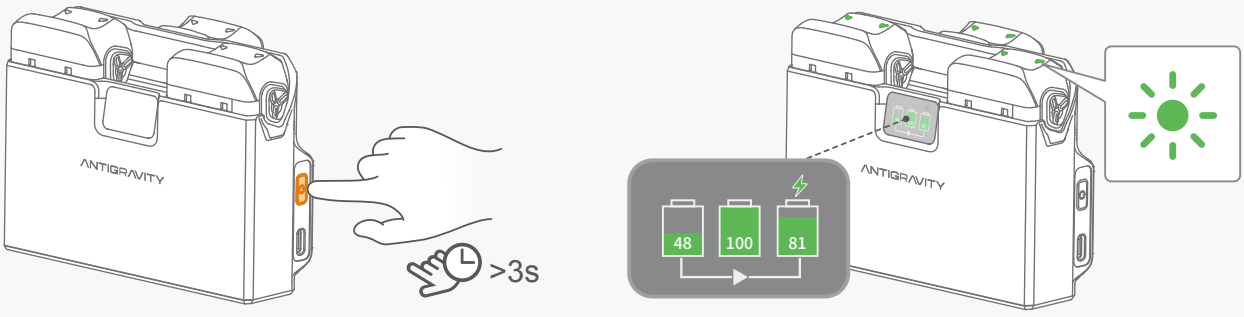

3. To stop the Smart Power Pooling, press and hold the Function button during the process.

The battery level must be higher than 20% to activate the Smart Power Pooling.

© 2025 Antigravity All Rights Reserved

Power Bank

1. Insert at least one flight battery into the Battery Charging Hub.

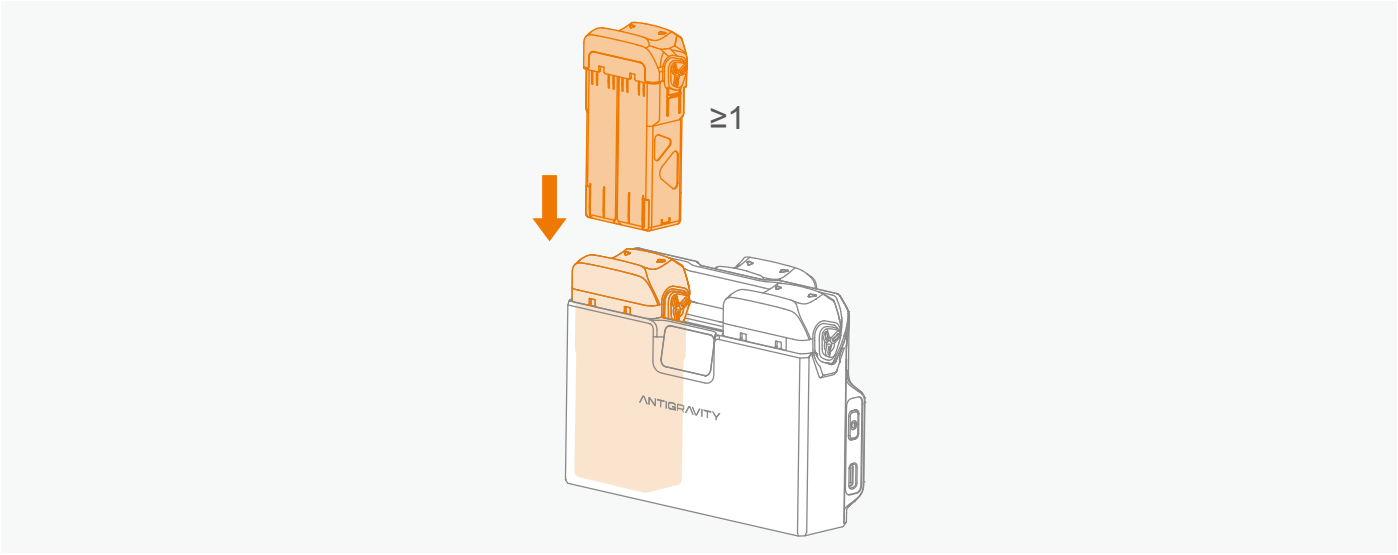

Be aware of pinching when inserting the battery.

2. Connect an external device (such as a mobile phone or motion controller) to the USB Type-C port on the hub.

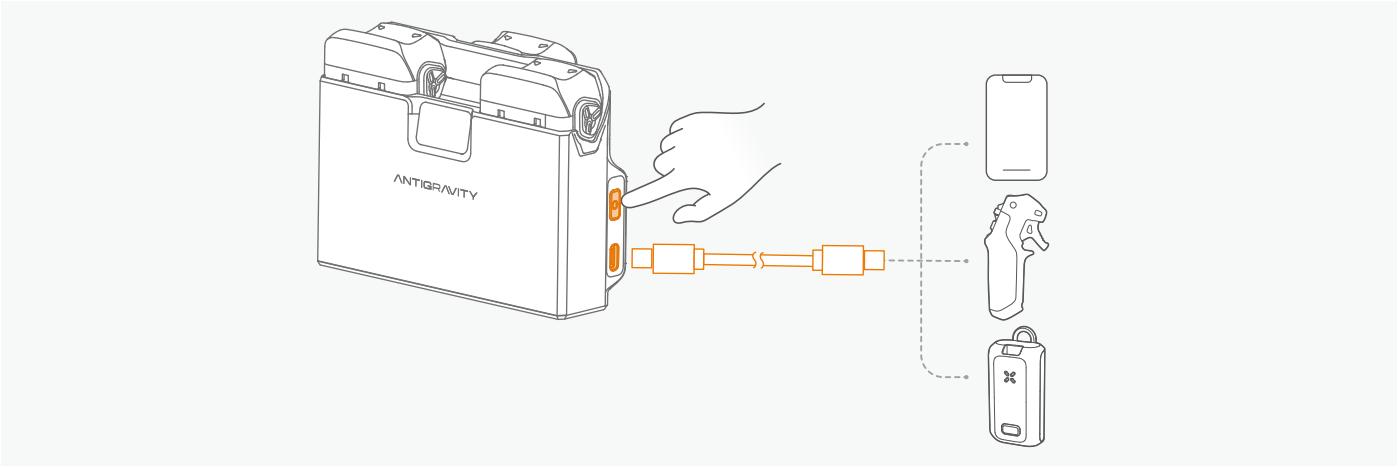

3. Press the Function Button once to begin charging the external device using the power from the inserted battery or batteries.
4. To stop charging, disconnect the external device from the hub.

The battery level must be higher than 10% to activate the power bank mode.

Battery Charging Troubleshooting

The Status Display on the charging hub can display the current system status and provide various error messages. Refer to the table below to find out the meanings of the each icons.

Icon	Description	How to resolve
	Overheat warning	Power off and allow cooling.
	Battery overheat	Power off and allow cooling.

© 2025 Antigravity All Rights Reserved

	Battery Charging Hub overheat	Disconnect the power source to cool down.
	Critical error	Contact the customer service for assistance.
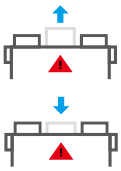	System shut down error	Remove and insert the battery and reboot the Charging Hub.
	Battery temperature low	Power off and let the battery sit at room temperature.
	Charging Hub temperature low	Power off and let the battery sit at room temperature.

Transferring Footages

To transfer extensive footage for editing, it is recommend using the Antigravity Quick Reader to export data from the drone to your editing device.

Quick Reader

The Quick Reader provides both a USB Type-C and a Lightning connector. Remove the cap of your desired connector in order to gain access to the connector.

1. Extract the SD card from your device after powering it off.

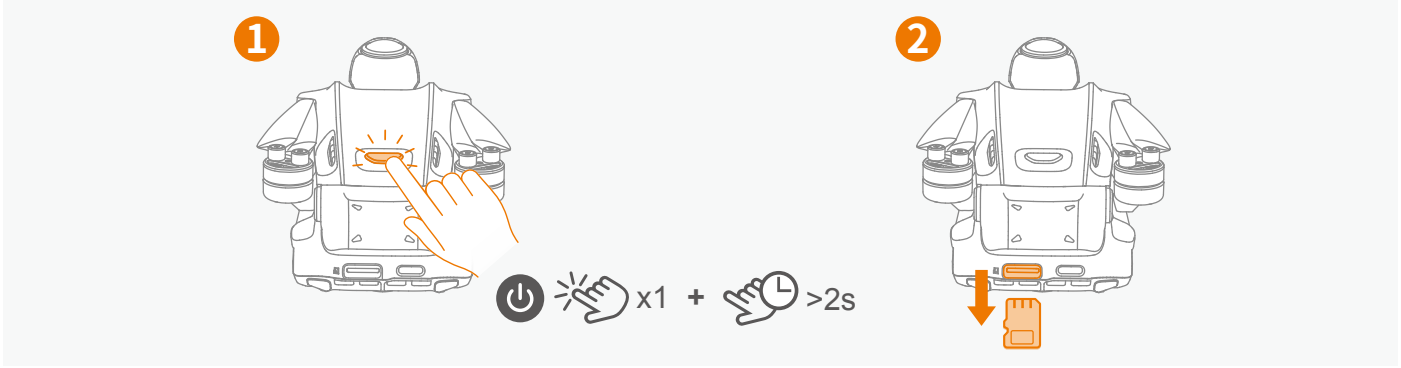

2. Locate the SD card slot on the side of the Quick Reader.

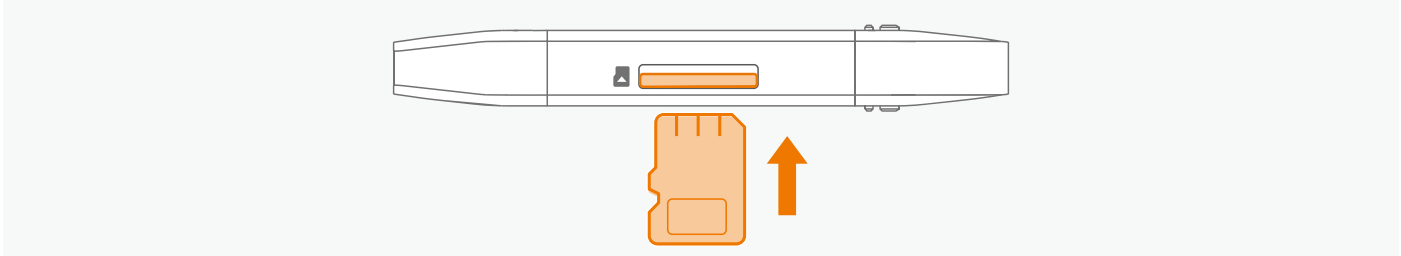

© 2025 Antigravity All Rights Reserved

3. Connect the Quick Reader to the mobile device.

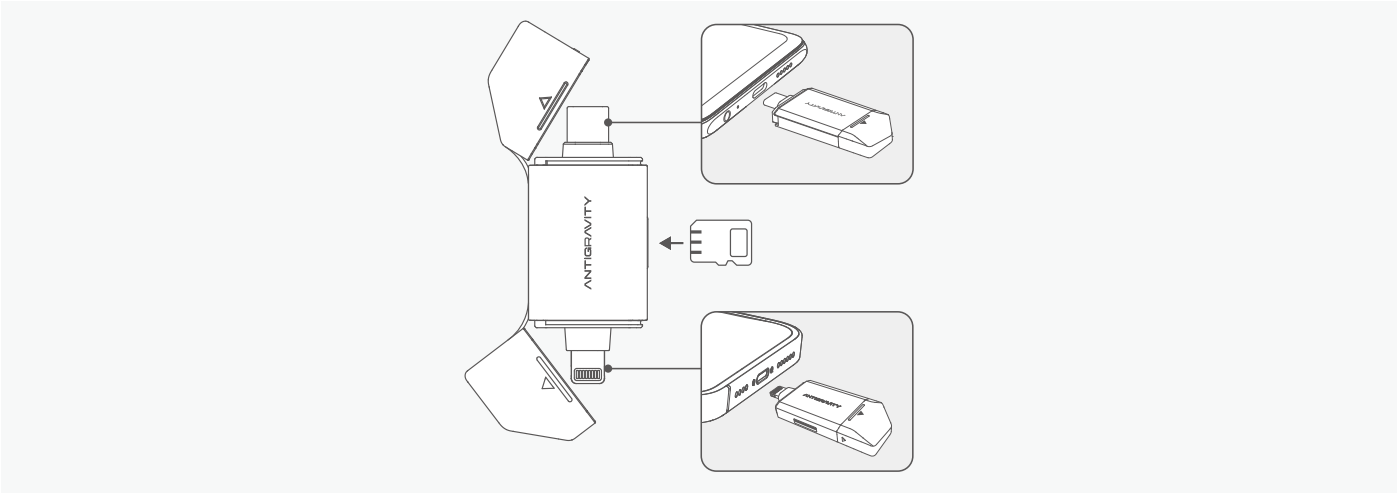

4. Launch the Antigravity App and follow the onscreen instructions to transfer the files.
5. You can now download, export, delete, and perform other simple operations in the Antigravity app.

⚠ ・Do not modify the file name of the footage during footage transmission to the Quick Reader.
・The Quick Reader does not support exporting data from the Vision Goggles.

Quick Transfer from Antigravity App

Apart from using the Quick Reader, users can also quickly transfer the footages captured by the drone to their mobile device through wireless connection via the app. Please follow the steps below to export the footages:

⚠ When transferring the footages, users will not be able to take off the drone.

1. Power on the drone. Turn on the Bluetooth and WiFi switches on your mobile device.
2. Launch the Antigravity app and select to connect to the drone.
3. In the album page of the app, choose Quick Transfer - Connect devices - Connect.
4. Once connected successfully, the App will display the list of materials in the drone. Select the footages and proceed with the download.

Vision and Infrared Sensing System

Features

The drone is equipped with downward and forward vision systems as well as infrared sensing systems, these systems work together to safeguard the flight of the drone. The main feature of the vision perception system include:

1. Vision Positioning:

Construct a three-dimensional model using cameras, infrared TOF, and AI algorithms to support autonomous obstacle avoidance, dynamic target tracking, and precise landing functions.

2. Obstacle Avoidance:

The forwards obstacle avoidance system can detect obstacles in front of the drone ranging, ensuring safety during flight; the downward obstacle avoidance system is mainly used to detect obstacles beneath the drone, assisting the drone in avoiding collisions with the ground or other objects during takeoff, landing, and low-altitude flight.

⚠ The drone cannot detect obstacles while it is ascending. User discretion is required to navigate obstacles directly above the drone.

© 2025 Antigravity All Rights Reserved

Vision and Infrared System Safety Notices

- **Environmental Factors:**
  - Vision and infrared sensing systems operate only in specific scenarios and cannot replace manual control and judgment. In low-light conditions, even with supplementary lighting, the vision system may not perform optimally.
  - The downward vision system may not work properly when flying close to the water surface (around 3 meters), user's desecration is advised.
  - The vision system may struggle to identify large structures with frames and cables. Stay away from these structures.
  - The system may not function properly near surfaces with no distinct pattern changes, areas with weak or strong lighting, extremely dark or bright surfaces, or surfaces that reflect or absorb infrared waves.
- **Flight Altitude:**
  - The downward vision system works best at altitudes ranging from 0.3 to 10 meters when the GNSS signal is weak. Performance may degrade when flying above 10 meters.

Vision Position Detection Range

Sensor Direction	Range	Field of View (FOV)
Forward	0.5 m to 18 m	Horizontal 93°, Vertical 105°
Downward	0.3 m to 10 m	Horizontal 107°, Vertical 90°

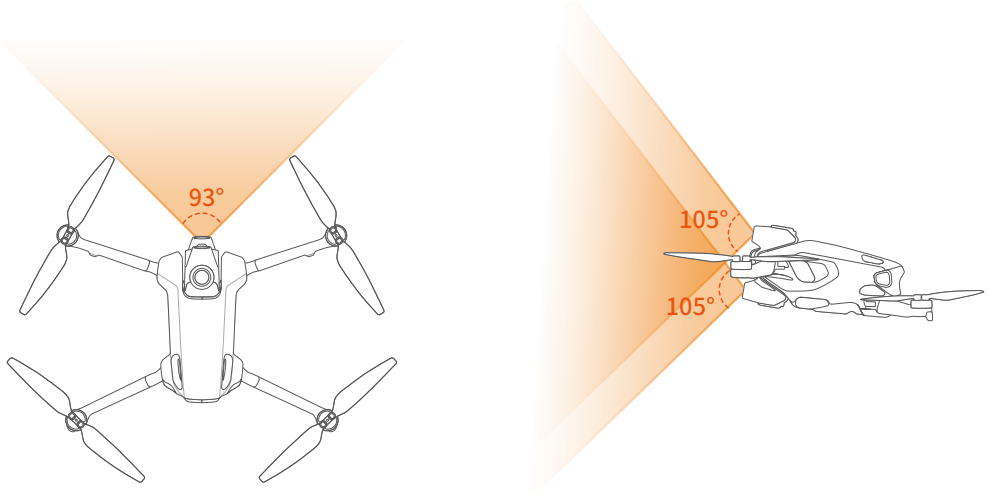

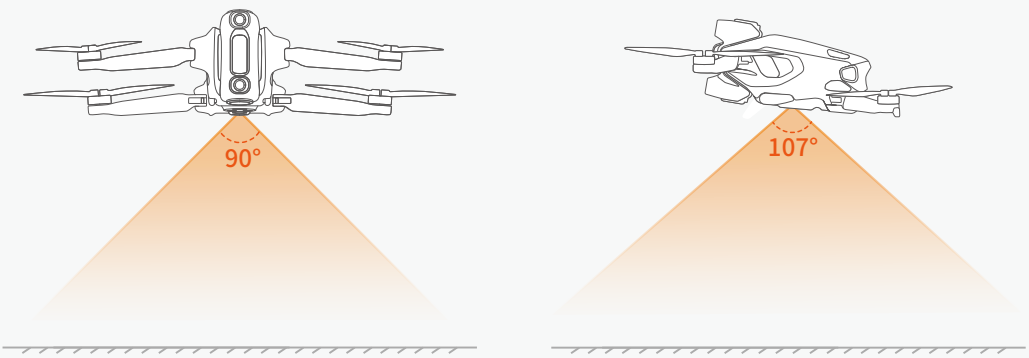

© 2025 Antigravity All Rights Reserved

Flight Recorder

After each takeoff and landing, the drone's flight telemetry data, flight status information, and other parameters will be automatically saved to the built-in storage card. Users can access this data through the application (Antigravity app).

Vision Goggles

Vision goggles is an intuitively designed device for interaction, equipped with a variety of functions to provide users with a comprehensive flying experience.

- **Video Transmission:** Equipped with high-resolution and wide color gamut dual OLED screens, supporting wireless connections such as WiFi, Bluetooth 5.3, etc.
- **Screen Recording :** Screen recording settings include recording of the vision goggles screen (option to record OSD information or only the image transmission screen) and voice recording.
- **Instant playback:** Supports playback of various video formats, allowing you to view captured materials without exporting them.
- **Customize feature:** Provides custom video display function, showcasing individuality.
- **Safety:** Provides voice prompts in case of emergency situations during the flight.

Vision Goggles Overview

Home Button

Press the Home button twice to enable the feature ***"Video See-Through" on page 69***. Press and hold the Home button to enter linking mode.

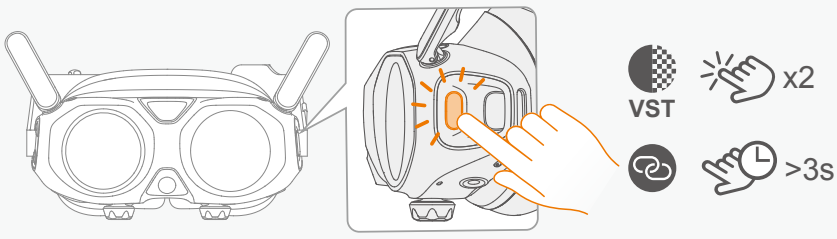

Volume Buttons

Use the up and down arrow keys to adjust the volume of the voice prompts or video play from the speakers.

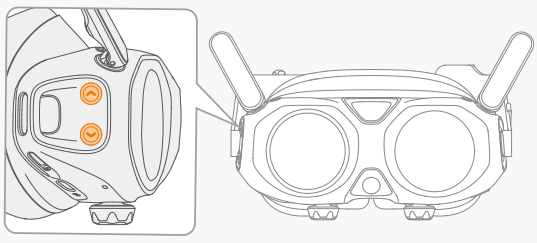

© 2025 Antigravity All Rights Reserved

MicroSD Card Slot

The MicroSD slot situated between the two lenses, refer to the figure below.

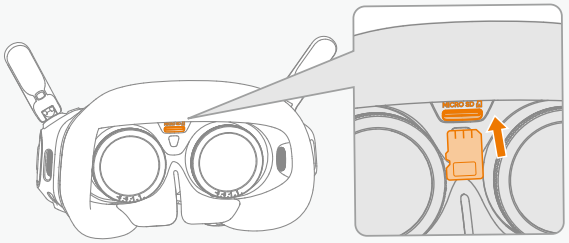

Insert the SD card gently as shown in the figure. To remove the SD card, press inward with a fingernail or a thin pointed object until you hear a click, then the SD card will pop out.

Power Port

The location of the power port for the Vision Goggles is shown in the following figure.

- The Vision Goggles do not come with a built-in battery and must be powered by an external power source.
- The Vision Goggles must be powered by the supplied Antigravity Vision Goggles USB-C to DC power cable. It is not compatible with an external USB cable.
- Keep the power port dry at all times; otherwise, the Vision Goggles will not function properly. In case of water damage or moisture, use a hair dryer to dry the affected port.

Use the Vision Goggles USB-C to DC charging cable to connect the Vision Goggles battery to the Vision Goggles, and attach the Vision Goggles battery strap to the buckle.

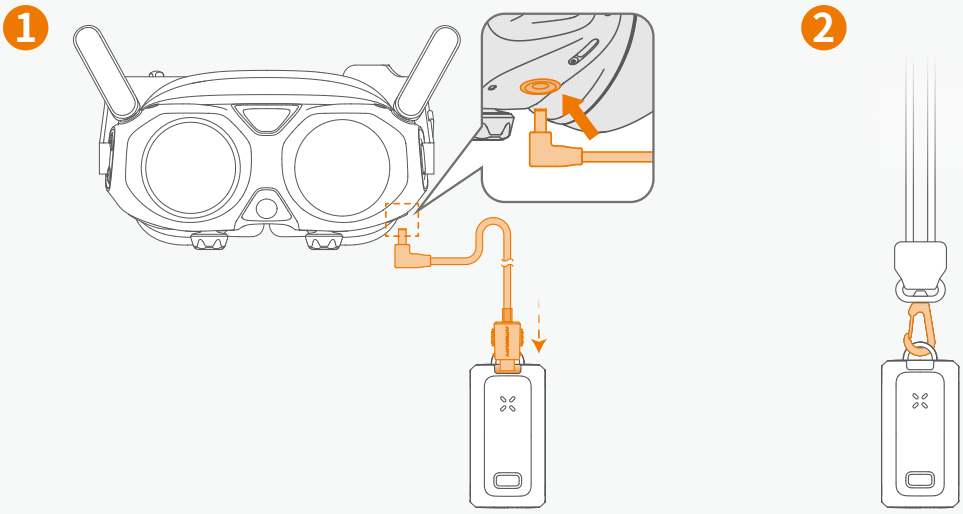

Power on the Vision Goggles

Press and hold the power button on the Vision Goggles battery for more than two seconds to power on.

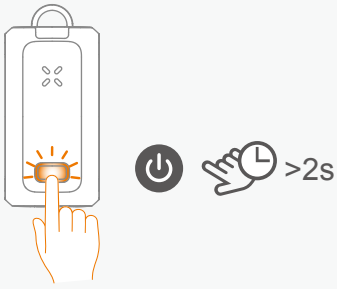

© 2025 Antigravity All Rights Reserved

Battery Level on the Vision Goggles Battery

Short press the power button once to check the current battery level of the Vision Goggles. For detailed information about the battery level, refer to the table below.



LED1	LED2	LED3	LED4	Battery Level
●	●	●	●	88% - 100%
●	●	●	◉	76% - 87%
●	●	●	◎	63% - 75%
●	●	◉	◎	51% - 62%
●	●	◎	◎	38% - 50%
●	◉	◎	◎	26% - 37%
●	◎	◎	◎	13% - 25%
◉	◎	◎	◎	0% - 12%

Legends Definitions:

- ● LED indicators flash solid green
- ◉ LED indicators flash green
- ◎ LED indicators is off

Powering Off the Vision Goggles Battery

Press and hold the power button on the Vision Goggles battery for more than two seconds to power off. During the process, the LED4 will blink and turn off at the end.

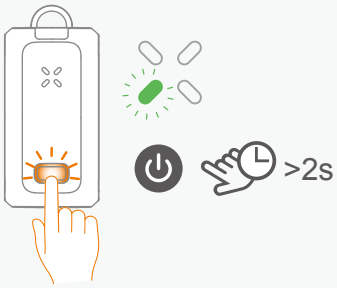

⚠ · To ensure the integrity of the data, please make sure to use the power switch to turn on or off the Vision Goggles.
· Do not power off the Vision Goggles by unplugging the power cord.

Virtual Beam

Basic Operations

While the drone is on the ground or hovering, you can interact with the Vision Goggles by using the Motion Controller via the virtual beam. It is represented as a straight white ray with a circular circle at the end.

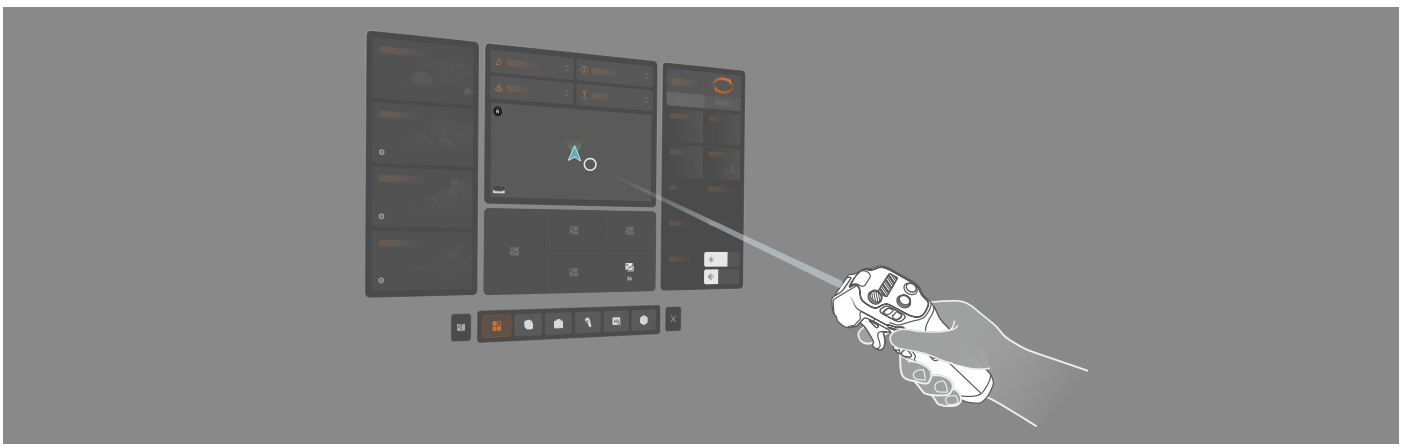

© 2025 Antigravity All Rights Reserved

· Waving your arm to move the virtual beam within the Vision Goggles menu. Pressing the throttle trigger to confirm the current selection and the white circle at the end of the beam will change to blue.

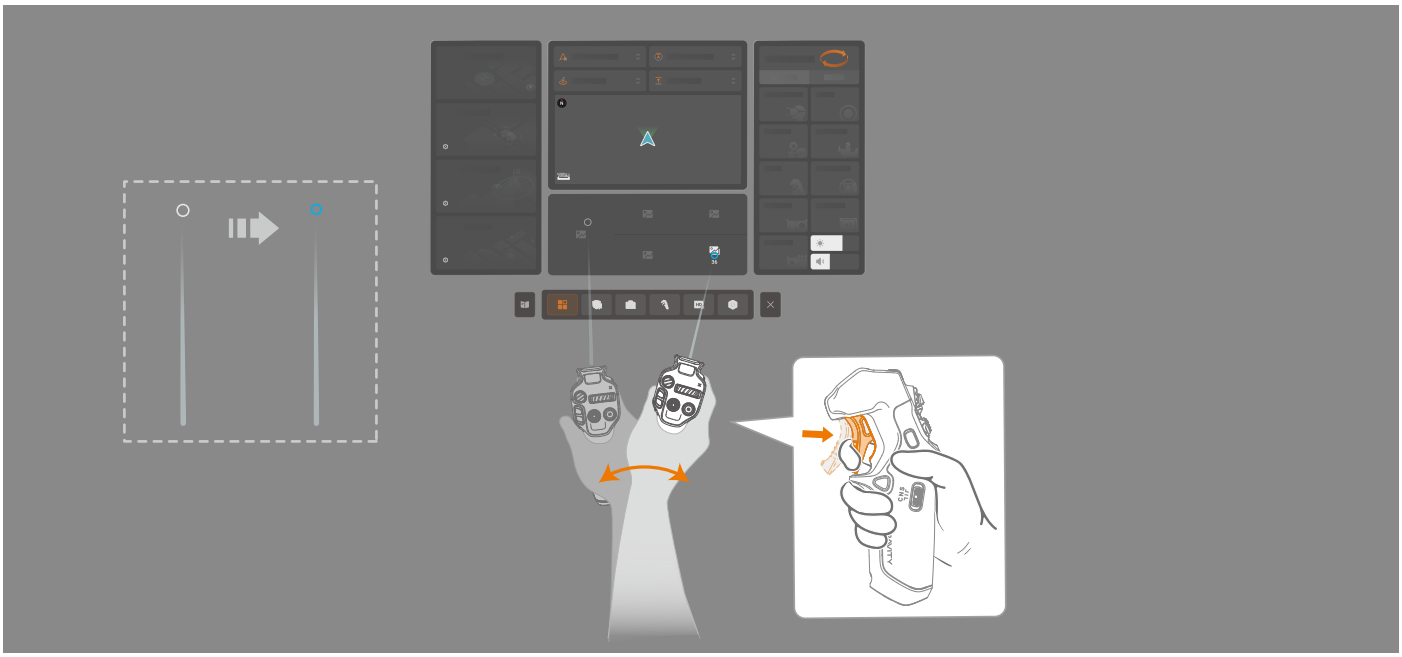

· While pressing the throttle trigger, swipe upward or downward to scroll through the menu options.

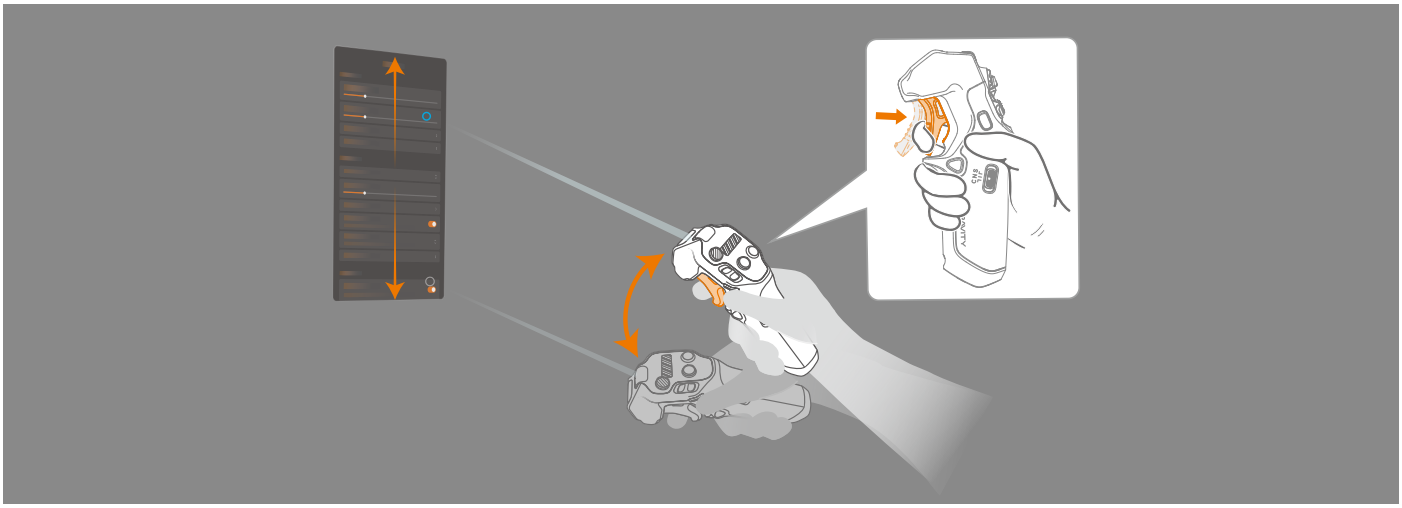

Be sure to remain still and use the virtual beam function in a safe environment on flat ground.

Re-center the Menu

If the Vision Goggle menu UI component has shifted away from the central position, press the 360 dial once to return the menu to the center position.

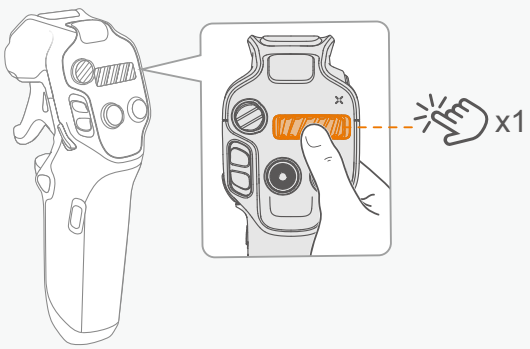

© 2025 Antigravity All Rights Reserved

Vision Goggles Menus

Flight Menu



Item	Description	Item	Description
1	**Flight Status Bar** Provides real-time information on drone flight status, including take-off/landing and GNSS signal status. The bar is green when the drone is in normal state, and turns yellow or red when user's discretion is required.	9	**Radar / Mini Map** It shows drone's orientation relative to horizon and heading, and position in relation to return point H. When drone enters return mode or uses preset route, area switches to small map. Map varies depending on the country or region where activation occurs.
2	**Video/ Screen Recording Time** Displays the duration of video or screen recording.	10	**Downward Vision Sensing** Display the distance to the detected obstacle.
3	**Home Point** Orange H mark shows last recorded Home point location, with arrow indicating direction relative to drone's heading.	11	**Flight Mode** Shows current flight mode. For more details, refer to ***"Flight Mode" on page 35***.
4	**Navigation Point** Indicating where the drone is heading toward. It will turn yellow or red when obstacle is detected on the flight path.	12	**Flight Speed and Distance** · **D** denotes the distance between the drone to the Home point with vertical speed. · **H** denotes flight altitude and the vertical speed.

© 2025 Antigravity All Rights Reserved

5	1h59min 1h32min	**Footage Storage** Display the remaining time the drone can shoot videos and the remaining time the flight glasses can record screen according to the current settings.	13	RC HD 29	**RC and Video Signal / Obstacle Avoidance** ・Display the strength of the video transmission signal of the Vision goggles, the strength of the GNSS signal, whether the obstacle avoidance system is enabled, whether the landing light is on or off. ・Display the signal strength of the remote control device and the image transmission signal strength between the drone and the Vision Goggles. ・The icon is white when the video transmission signal is strong, and turns gray when the signal is lost. ・The icon is orange when the signal strength is moderate, and turns red when the signal is extremely weak. The white icon indicate signal is strong.
6	08'36" 65	**Drone Battery Level** Display the current battery level and the estimated remaining flight time duration.	14		**Notification Area** Display system alert messages that require user action, such as battery low warning messages.
7	32%	**Motion Controller Battery Level** Displace current battery level for the controller.	15		**Picture-in-picture** Display heading of the Navigation Point direction. It is enabled when the Navigation Point is deviated from the head tracking of the user.
8	48%	**Vision Goggles Battery Level** Displace current battery level for the Vision Goggles.	16	8K/30 A +0.3 6500K	**Camera Parameters** Display the current camera profile.

© 2025 Antigravity All Rights Reserved

Vision Goggle Menu

When the drone is on the ground and powder on or is hovering in the air, users can access the Vision Goggles via the pressing on the menu button on the Grip Motion Controller. The layout of the Vision Goggles menu is as follow:



Item	Description
1	**Advanced Flight Path** You can trigger automatic RTH or use the Deep Track feature to follow the subject that you wish to film, or pre-plan your shot using the Sky Genie and feature from this panel.
2	**Notification Area** Display various flight control system status information and the latest user notices, including but not limited to firmware update notifications, flight protections zone database updates, and other information.
3	**Flight Safety Menu** Users can quickly set and adjust flight safety-related parameters and behaviors through the virtual beam. This includes behaviors in the case of signal loss, obstacle avoidance behaviors, RTH altitude, and maximum altitude values.
4	**Mini Map** After the Vision Goggles are connected to the mobile app, the mini-map will display geographic location information of the current area. Users can use this interface to check if there are any restricted flying zones near the flight area. When using features like preset routes, users can view route information through the mini map.
5	**Photo Album** Display photos or videos stored in the memory of the Vision Goggles or on the MicroSD card. Select any file for preview. After connecting to the drone, you can preview or play photos or videos stored on the drone.

© 2025 Antigravity All Rights Reserved

6	**Control Mode and Quick Access** · ***Flight Control Mode:*** Toggle between Free Motion and FPV Mode · ***Screen Capture:*** Record the user's first-person view and the pick up the surrounding sound and various menu operations. You can choose to store the recordings in the memory of the Vision Goggles or on an external storage card. · ***De-fog:*** Activate the built-in fan to accelerate the evaporation of moisture. · ***Video Transmission Setting:*** Set parameters such as image transmission aspect ratio. · ***Brightness and Volume Adjustment:*** Adjust the image brightness of the flying goggles, adjust the volume of language prompts, and playback video volume. · ***Camera Parameter Settings:*** Adjust resolution, frame rate, EV and white balance in this section. · ***Virtual Cockpit:*** In FPV mode, you can choose different virtual cockpit skin. · ***Outer Display and Ring Light:*** Set the what to be display on outer display and select the visual effect. · ***Customizable Buttons:*** Set the functions corresponding to the C1 and C2 buttons.
7	**Video Tutorials and Documentations** View the official videos tutorials and documents provided.
8	**General Settings** When the Vision Goggles are connected to the drone, users can make the following settings through the Setting page:  · Set up flight protection areas, return behavior, and RTH height information. · Find drone information. · Enable or disable automatic landing gear retraction function. · Flight battery and firmware version.  · Advanced shooting settings, users can fine tune various settings such as framing guidelines, histograms, low-light stabilization. · Users can also reset camera settings on this page. · After each replacement of the lens, calibration stitching operations need to be performed from this page.  · Adjust advanced settings such as throttle control curve for the overall remote controller feel. · Adjust the mapping relationship of the C1 and C2 custom button functions.  · Set the transmission mode of the image transmission, including options for image aspect ratio, and transmission channel for the image transmission, etc.  · In general settings, users can set up account information, update firmware, check the device's firmware version, update flight protections zone data, and perform other operations on this interface.

© 2025 Antigravity All Rights Reserved

Quick Menu

After power on the Vision Goggles battery, press and hold the menu button to access the quick menu.

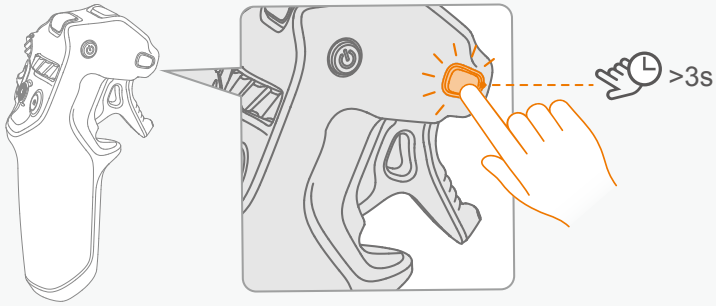

1. While holding the menu button, swing your arm to move dial to select options on the quick menu.



2. Rotate the dial to the desired menu option, release the menu button to select the current option.

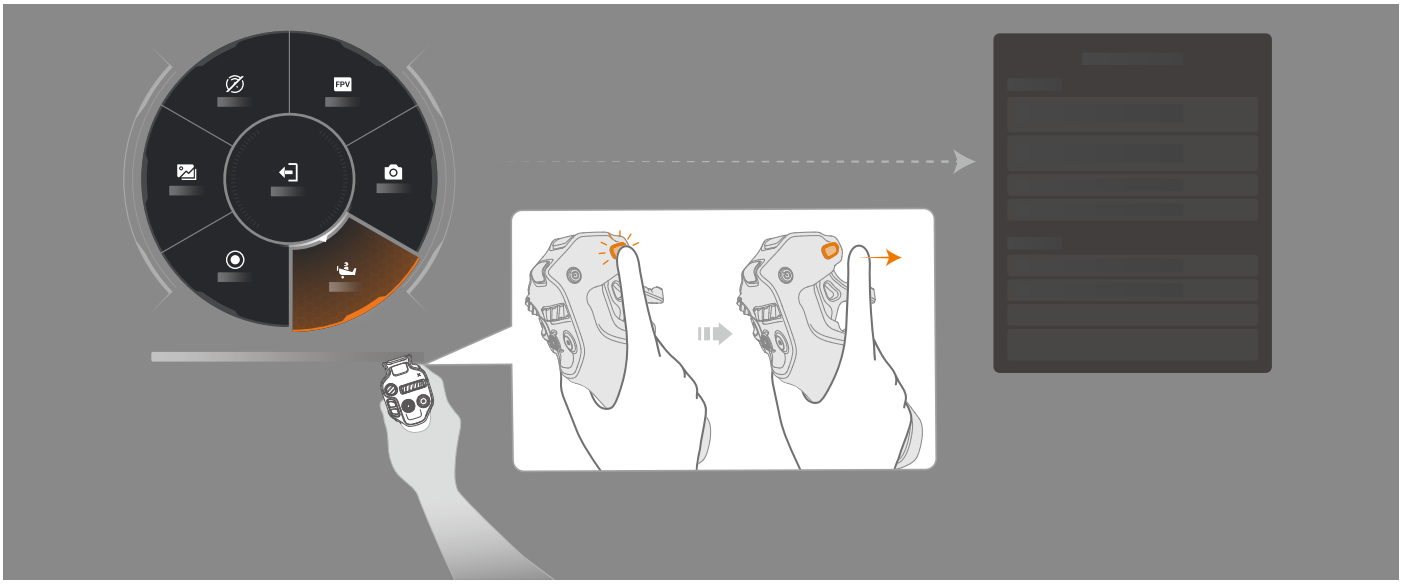

© 2025 Antigravity All Rights Reserved

Outer Display

Outer Display Overview

The outer display, as an important interactive interface of the Vision Goggles, possesses the following key functions:

- Share the flight perspective
- Personalized display

Sharing Flight Perspective

As an essential interactive interface of the Vision Goggles, the outer display screen enables the function of sharing the flight perspective, allowing users to share the visuals of their flight and experience flying moments with others.

- During the flight, the out display will display the real-time image information transmitted by the drone. Spectators near the operator can watch the flight visuals on the secondary screen and share the flying experience together.

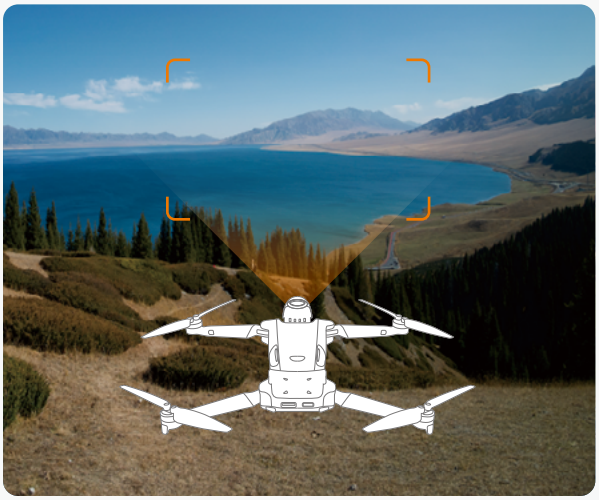

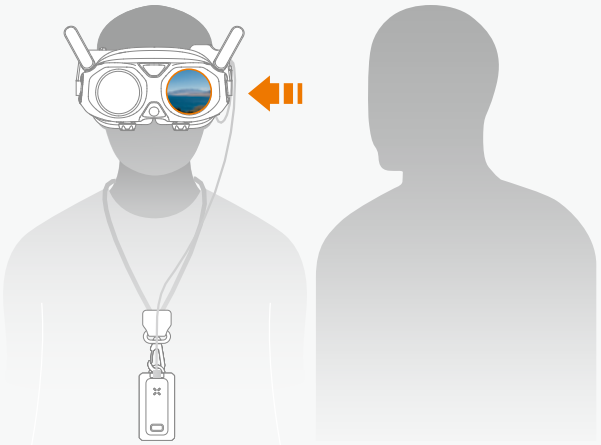

Personalized Display

- Supports personalized display function, allowing users to choose different standby videos or images through the "Outer Display and Halo" option in the Vision Goggles menu. The location of this setting is shown in the following figure.

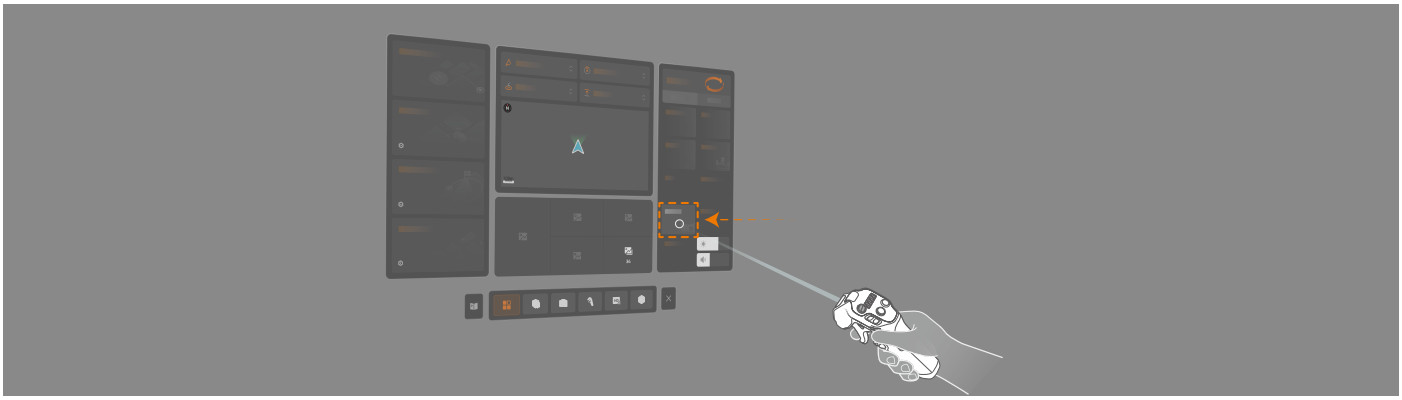

© 2025 Antigravity All Rights Reserved

Video Playback

The Vision Goggles supports video playback on various format, including 3D video. It bring a immersive viewing experience to the users.

1. Insert the MicroSD card that contains the video footages that you wish to view.
2. Power on the Vision Goggles and enter the Vision Goggles menu, access to the "Album" page at the main menu and locate the footages that you wish to play.
3. Select the footages via the virtual beam and pull the throttle trigger to confirm your selection, then the video play back begins.

Exporting the Footages from Vision Goggles

Storage

Vision Goggles have built-in storage and support external memory cards. To learn how to install an external card, refer to the ***"Vision Goggles Overview" on page 58***. Recorded videos footages are saved to the built-in storage by default, but users can select their preferred storage location in the menu.

Exporting Footages from Vision Goggles

1. Power on the Vision Goggles.
2. Connect the Vision Goggles to a computer using a USB-A to USB-C data cable, and export the files as prompted.

Exporting Footages from SD Card

1. Turn off the Vision Goggles.
2. Use your fingernail or a flat object to press inwards on the MicroSD card until it pops out.

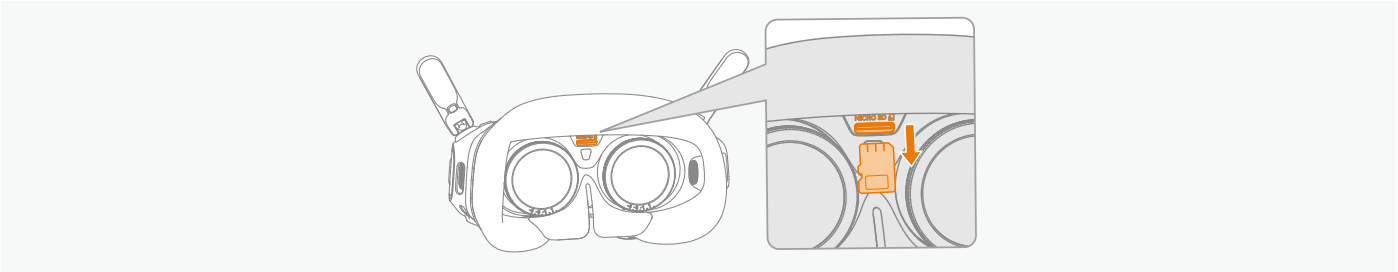

3. Use a card reader you preferred to read and export the recorded video footages from the MicroSD card.

© 2025 Antigravity All Rights Reserved

Video See-Through

The Vision Goggles is equipped with a forward-facing camera, allowing users to view their surroundings without removing the goggles. Follow the instruction below to use this feature:

1. Press twice on the Home button on the left side, the Vision Goggles will project the user's surroundings in black and white images inside the goggles.

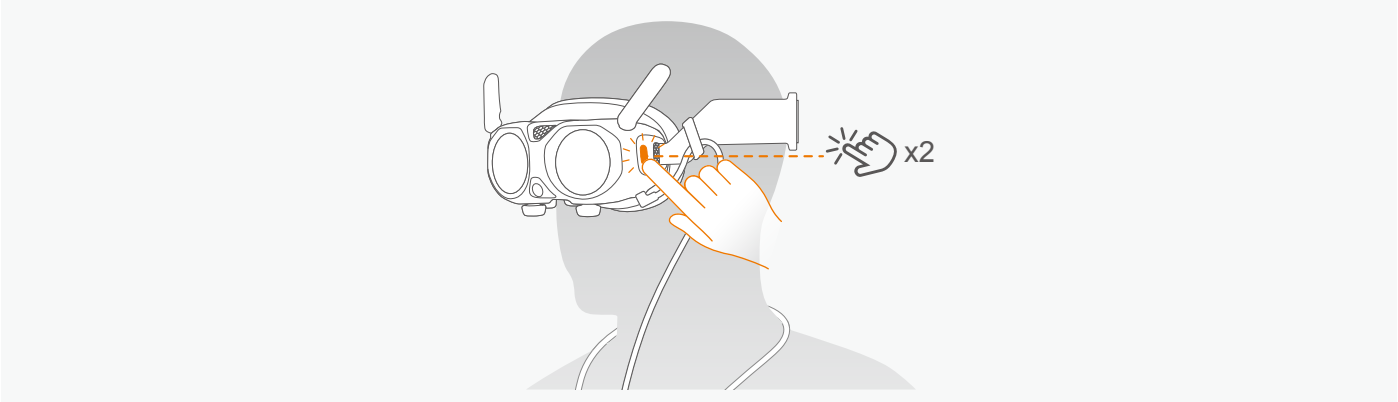

The images from video see-through are displayed in black and white, which is normal.

2. Press twice on the Home button to exist see-through mode, or tap on the button via the virtual beam to return to the Vision Goggles menu.

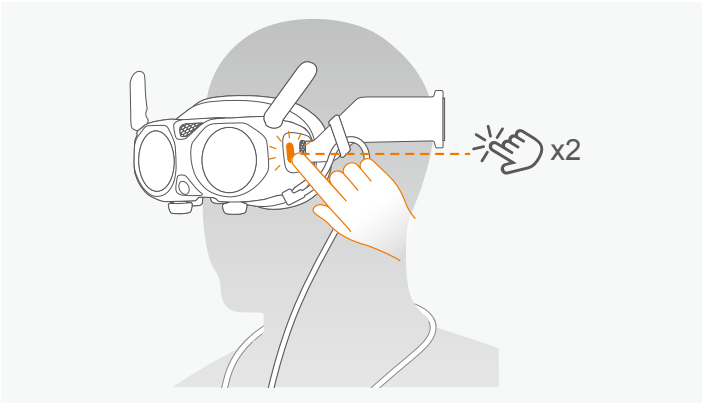



Vision Goggles Safety Notices

- Before using the Vision Goggles, always wipe the lenses inside with the official lens cleaning cloth provided to ensure the best user experience.
- Do not use alcohol or other solvents to clean the optical lenses of the Vision Goggles. It is recommended to use the official lens cleaning cloth.
- If the degree of vision correction exceeds 200 to 500 degrees, users will need to separately purchase lenses to suit their needs.
- It is recommended to refer to the scale range on the lens when wearing the Vision Goggles for the first time, manually adjust the appropriate degree, and then fine-tune when wearing them.
- Be careful when adjusting the diopter adjustment knob as there is a limited range of adjustment. Do not exceed the range to avoid damage.
- Avoid direct sunlight on the lenses of the Vision Goggles as it may cause damage to the lenses.

© 2025 Antigravity All Rights Reserved

Grip Motion Controller

Power Button and Battery Level Indicator

Powering On/Off the Grip Motion Controller

· Press once on the power button to check the current battery level.

· Press once on the power button and hold it for two seconds to power on or off the Grip Motion Controller.

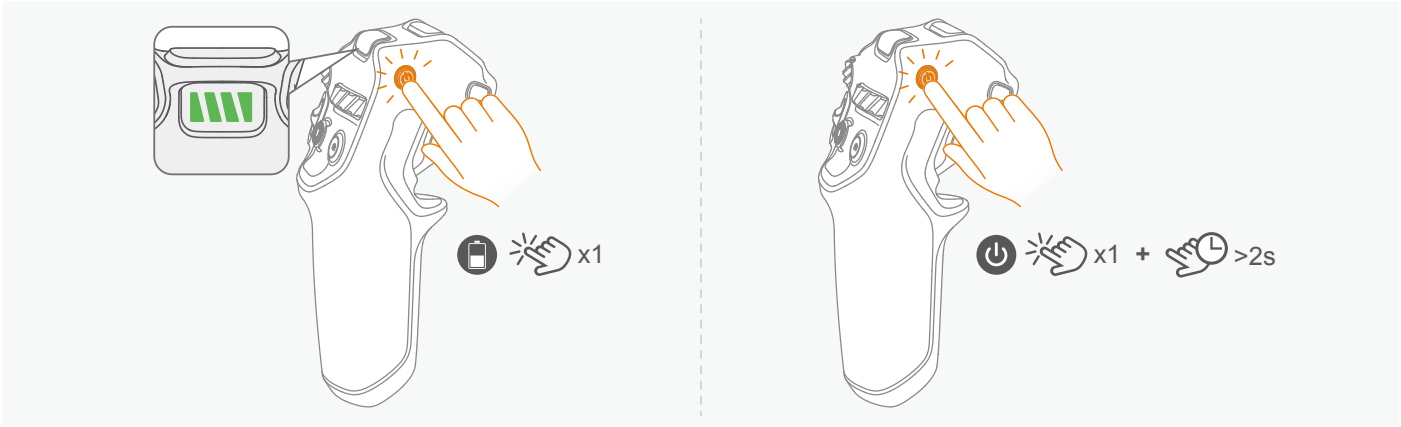

Charging the Grip Motion Controller

The charging port is the end of the handle. Connect a charging cable to this port to charge the controller.

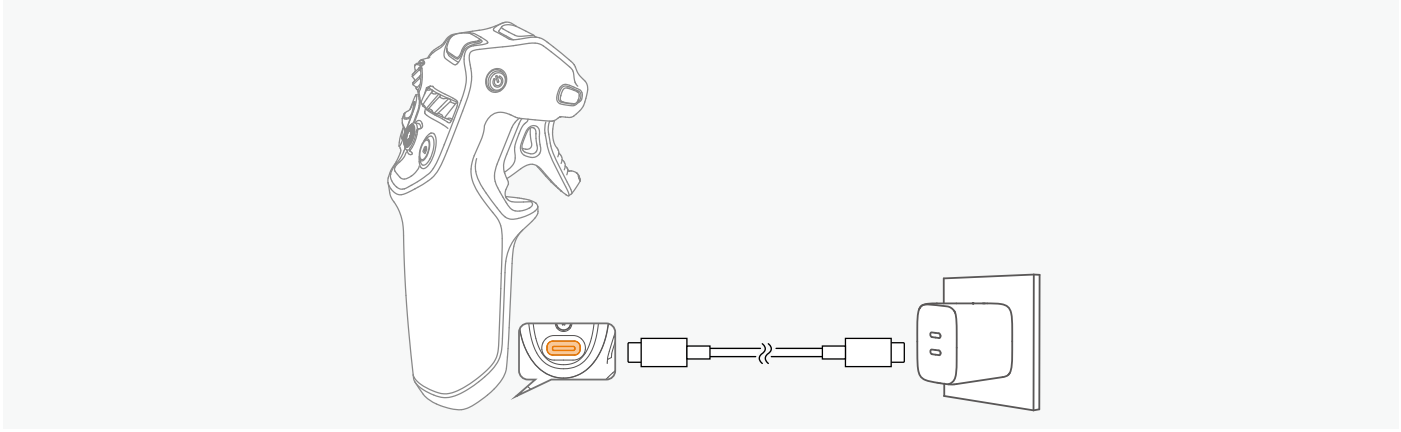

Battery Level Indicators

Apart from displaying the current battery level, the indicator also serves as the system indicator to display information such as linking status and so on.

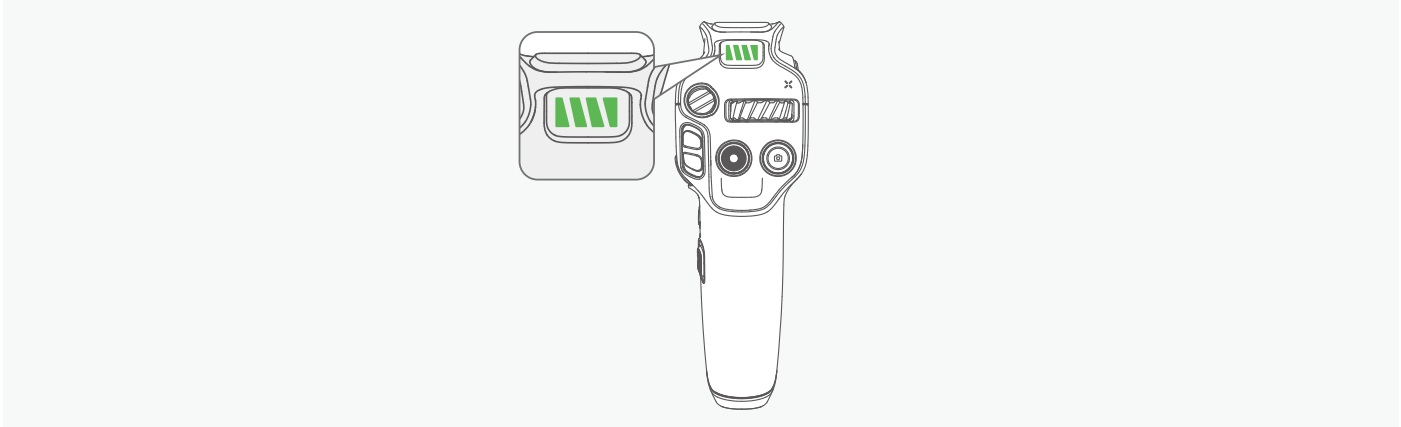

© 2025 Antigravity All Rights Reserved

The blinking pattern of the indicators is as following.

Blinking Patter	Status
	Four green bars indicate that battery level is approximately 100 - 75%.
	Three green bars indicate that battery level is approximately 75 - 50%.
	Two green bars indicate that battery level is approximately 50 - 25%.
	One green indicates that battery level is approximately 25 - 15%.
	Slow blinking of one green bar indicates that battery level of 15 - 5 %.
	Fast blinking of one green bar indicates that battery level of 5 - 0%.
	Blinking green LEDs indicates the controller is searching for the drone.
	Loop playback indicates it is in the linking state.

The middle section of the LED indicators blinking () indicates that the Grip Controller is updating its firmware.

Grip Motion Controller Buttons

Button	Functions
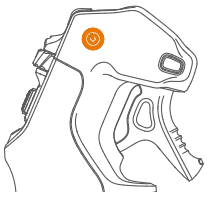	**Power Button** Power on/off ・Press once, and the hold to power on or off the Grip Motion Controller. Hold for more than 10 seconds to force shutdown the Grip Motion Controller. Linking ・Power on and press and hold for four seconds to start linking.

© 2025 Antigravity All Rights Reserved

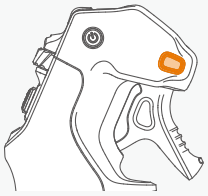

Menu Button

Short press or long press to enter the general menu or quick menu of the Vision Goggles.

General Menu

· When linked to the goggles, press once to enter the general menu, press again to exit.

Quick Menu

· Press and hold to enter the quick menu. Release to confirm the selection and exit.

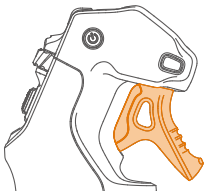

Throttle Trigger

In Flight Menu

· Press inward or release the button to accelerate or decelerate the flight speed of your drone.

In the General or Quick Menu

· Press once to confirm the selection, press and hold to scroll up and down.



Emergency Brake/ RTH Button

This button manifests differently according to the flight status of the drone.

Mid-air

· While the drone is in mid-air, press once briefly to make the drone stop immediately.

RTH

· While the drone is in mid-air, press and hold to initiate RTH. The drone will begin to return to the recorded Home point.



360 Dial Button

When drone is grounded

· Turn left or right to adjust the camera view.

While Hovering

· Turn left or right to change the heading of the drone.

While view in the Vision Goggles

· Press inward to recenter the perspective of the heading of the drone.



Flight Slider

Use the slider to take off or land your drone and adjust the flight altitude.

Unlocking Motors

· Push the flight slider upwards in two short bursts to unlock the motors, putting them into idle mode. Push the flight slider twice to stop the motors.

Taking Off

· While the motors are unlocked, push the slider continuously for more than two seconds to allow the drone to ascend. The drone will take off and hover at 1.2m. During the flight, push the slider upwards or downwards to adjust the flight altitude of the drone.

Landing

· Push the slider downwards to allow the drone to descend. The drone will slowly land on the recorded Home point and stop the motor.

© 2025 Antigravity All Rights Reserved



Record Button

By default, press and hold to switch to video recording mode. Press once to start recording, press again to stop recording.



Shutter

By default, press and hold to switch to camera mode. Press again to take the picture.

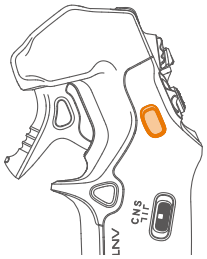

Customize C2 Button

Landing Gear

- Press twice to lower or retract the landing gears.

Customize

- Customize the function of the C2 button through the general menu.

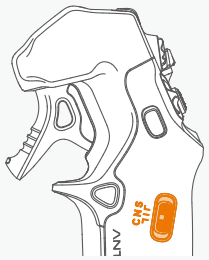

Flight Mode Toggle

Toggle to switch the flight mode into the follow three flight modes:

- N (Normal) mode
- S (Sport) mode
- C (Cine) mode

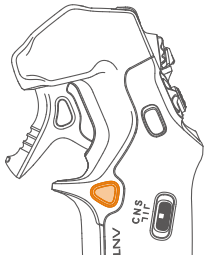

Customize C1 Button

Tracking

- When drone is in mid-air, long press the button to select the tracking subject from the live view.

Landing Light

- When drone is in mid-air, short press the button to turn on the landing light.

© 2025 Antigravity All Rights Reserved

Grip Motion Controller Signal

For optimal transmission quality, ensure there are no obstacles between the Grip Motion Controller and the Vision Goggles.

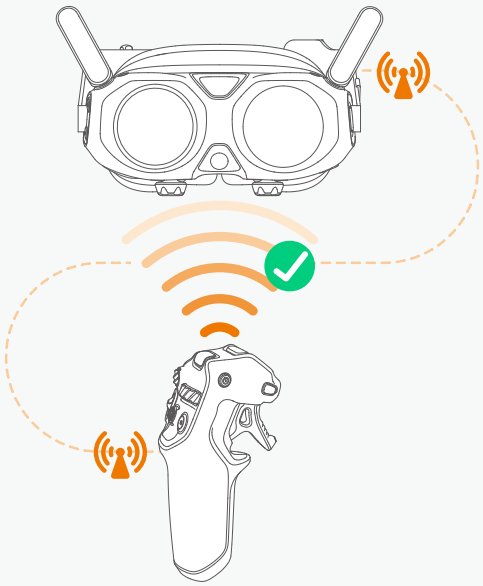

- It is recommended to use the motion controller in an open and unobstructed environment, ensure there is no obstacles between the motion controller and the drone.
- Ensure that there are no other radio transmission devices operating adjacent to the motion controller, as they may create interference.

Alert Sounds

Low Battery Alert

When the motion controller's battery is low, an alarm will sound. It can be canceled by pressing once the power button. However, the alarm cannot be muted when the battery level is below 5% in order to prompt the user to return and land.

RTH Alert

The Grip Motion Controller will beep alerts while the drone is in the RTH process. Note that this beeping alert cannot be muted as long as the drone is still in RTH state.

© 2025 Antigravity All Rights Reserved

Antigravity App

Connect the Vision Goggles to the mobile device, launch the Antigravity app to enter the home page. The home page includes the following major features:

- Explore aerial hot spots around your area. Understand the concept of flight protection areas, policies and other information, and watch video tutorials and user manuals for product knowledge.
- Brows your footages from albums on your drone or your mobile devices, or use Studio for creative video editing and sharing them on the social media.
- Log in to view account information and flight records.
- Other functions, such as firmware updates, aircraft searching, Find My Drone.

- Before using the Antigravity app, ensure your mobile device is fully charged.
- Cellular data package is required while using the Antigravity app, contact your carrier for pricing.
- Read all safety guidelines and disclaimers from the app and understand local regulations.
- Before using the Antigravity App, you must read and agree the terms of use and privacy policy, please read and understand the terms and policies.

Intelligent Flight

Deep Track

Deep Track

The Deep Track modes of the A1 drone allows the drone to automatically follow the selected shoot objects while maintaining a safe distance from the objects. This section provides information about the basic operation of the Deep Track mode and its safety notice during the usage of this mode.

The drone cannot automatically start recording the video while the drone is tracking the object. Users will need to manually start recording the video.

Auto Mode

The drone maintains a specific distance and flight altitude from the manually selected object while flying. And the acceleration direction and flight direction of the drone always follows the direction of the tracked object.

Circle Mode

The drone maintains a specific distance and flight altitude from the manually selected object while flying. Additionally, the acceleration and flight direction of the drone always follow the direction of the tracked object. Different from the general mode, the drone will circle around the tracked object in the specified direction while tracking.

Optimal Tracking Distance

Tracking Object	People	Vehicle or Boat
Horizontal Distance	4 - 10 m (13 - 32 ft)	6 - 30 m (19 - 104 ft)
Height	2 - 10 m (7 - 32 ft)	4 - 30 m (13 - 104 ft)

The drone will adjust its distance to the tracked object when flying beyond the recommended detection range. Users may use the grip controller to adjust the aforementioned parameters when the drone is operating within the detection range.

© 2025 Antigravity All Rights Reserved

Using Deep Track

1. Take off your drone in an open area, and allow the drone to hover at a safe altitude.

> In case of obstacle avoidance is unavailable due to the external environmental conditions (such as operating at night time or low light), users must read and confirm the warning message in the countdown prompt before engaging the Deep Track feature.

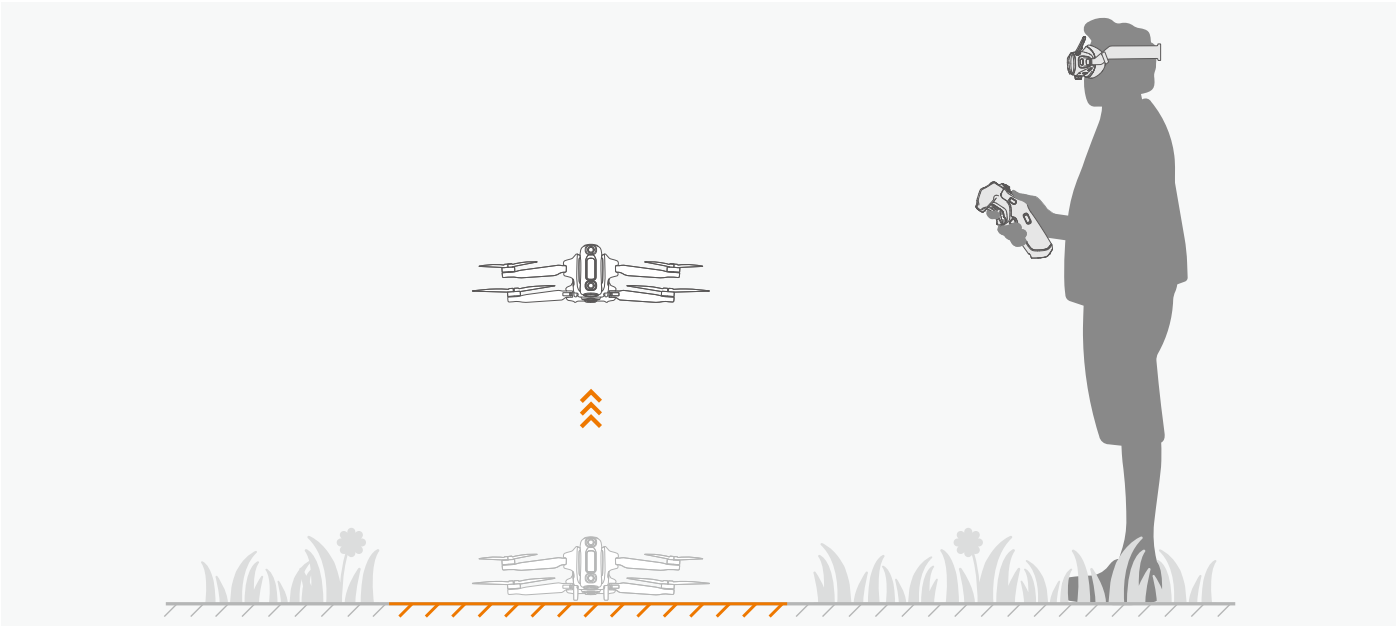

2. Press the Menu Button on the Grip Controller to enter the flight menu of the Vision Goggles. Select the Deep Track option by using the virtual beam.

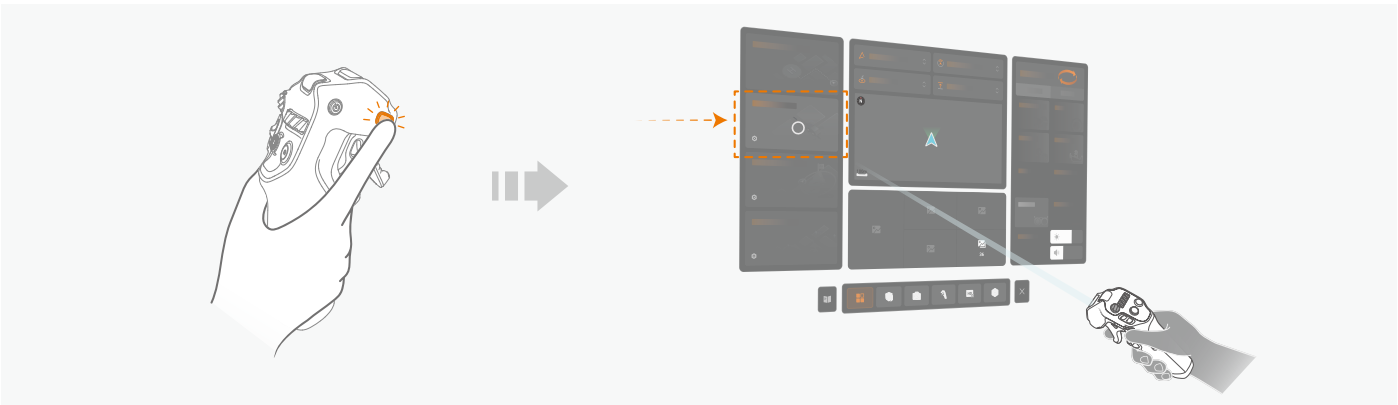

> Drone cannot start tracking an object if it is in photo mode. Ensure the drone is in video shooting mode before using Deep Track. Refer to ***"Grip Motion Controller Buttons" on page 71*** for instructions on how to switch between photo and video modes.

© 2025 Antigravity All Rights Reserved

3. After activating Deep Track mode, press the C1 button on the Grip Controller and drag the green selection box on the screen to select the object you wish to track. Release the C1 button to confirm the selection, and then the drone will start tracking the object.

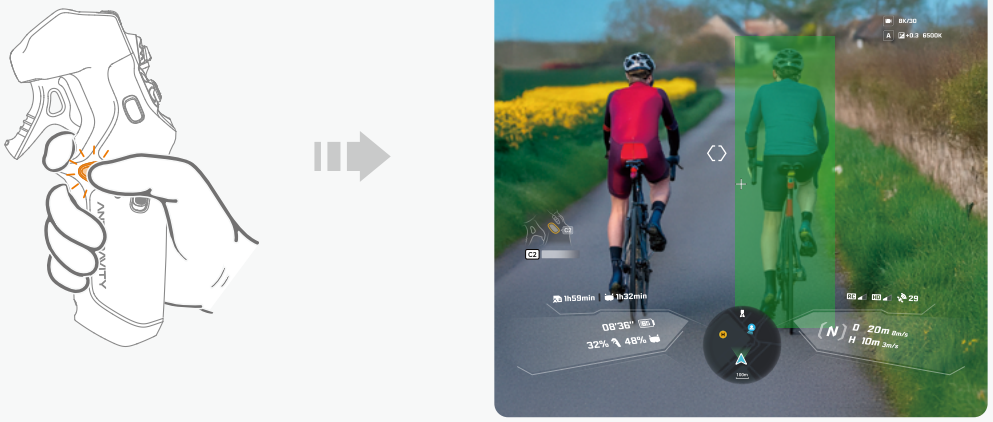

You can also long press the C1 button on the Grip Controller to activate the Deep Track mode· Be aware of the count down progress displays on the screen.

Caution: User must read and confirm a warning prompt from the Vision Goggles if the obstacle avoidance system become unavailable due to the external environment constraints. Automatic tracking will only start after the user chooses to proceed in spite of the warning.

The drone might approach the tracked object during the object selection stage. Hence, we should always maintain a safe distance between the object and the drone.

4. After tracking has started, the drone will begin following the object as it moves, maintaining the pre-set following direction and distance. Users may start recording while the tracking is in progress.

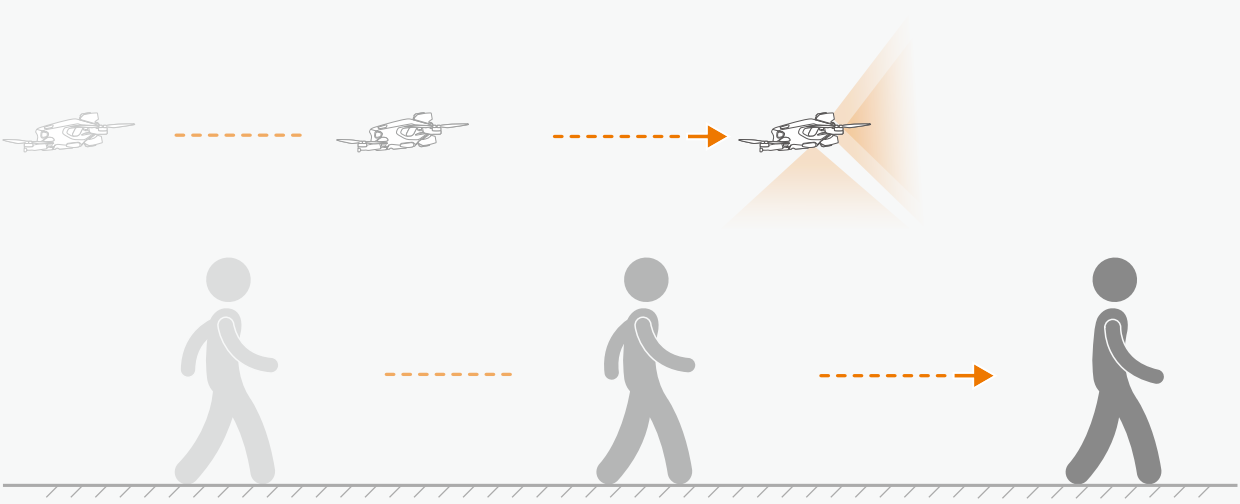

Caution: During the tracking, the drone will not respond to the swing movements from the users; however, the user can still control the cruise speed and the flight altitude of the drone.

© 2025 Antigravity All Rights Reserved

5. The default tracking direction to the object is “Rear”. If you wish to switch the track direction during the tracking process, long press C1 button on Grip Controller to bring up the quick access dial and adjust the tracking direction.

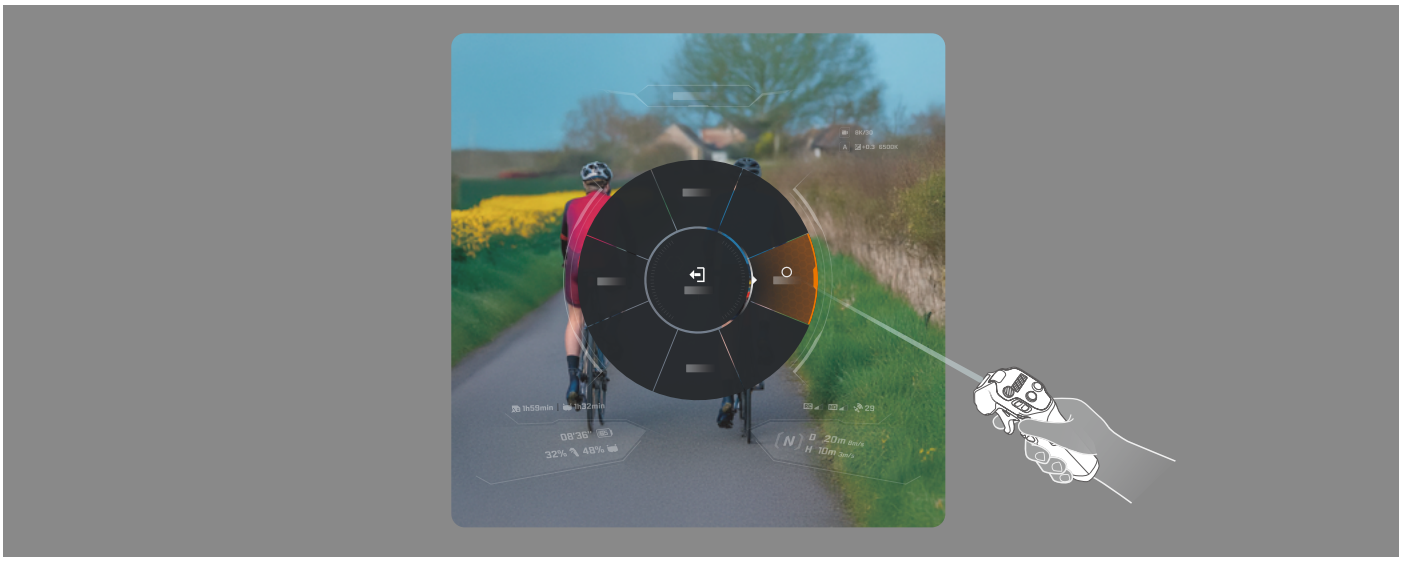

6. Abort the tracking by pressing the Brake button on the Grip Controller at any time to ensure safety. At this time, the drone will hover at the current altitude awaiting further instructions from the users.

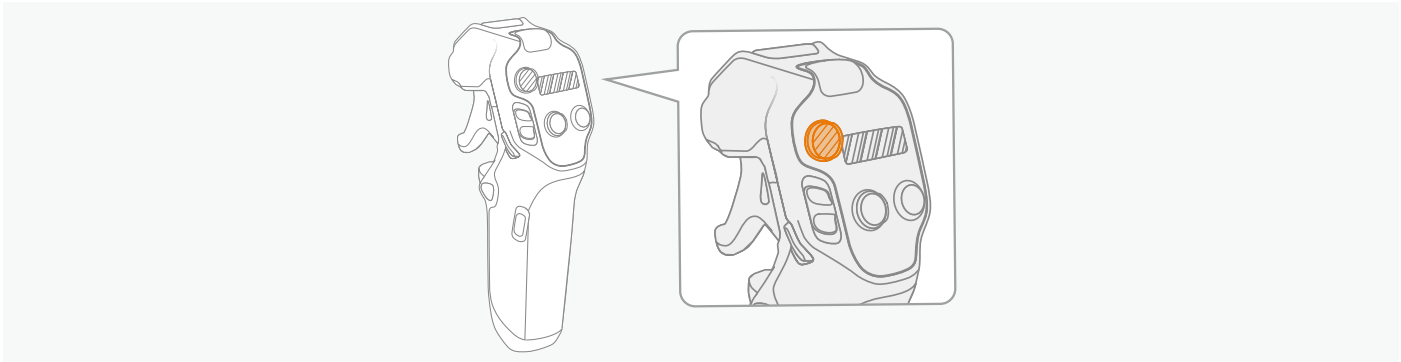

© 2025 Antigravity All Rights Reserved

General Safety Notices for Deep Track

- Be sure to use the Deep Track feature in an open, well-lit environment. Otherwise it may pose danger to others.
- The obstacle avoidance of the drone remains functional during the tracking process, still capable of detecting obstacles in the direction of the drone's heading. However, the drone cannot detect obstacles at the rear or sides of the drone. Fly with caution in these scenarios.
- DO NOT use the Deep Track feature in areas where branching or fine objects (such as tree branches, power lines), transparent objects (such as water, glass), or monochrome surfaces (such as white walls) are present, as it may affect the flight safety of your drone.

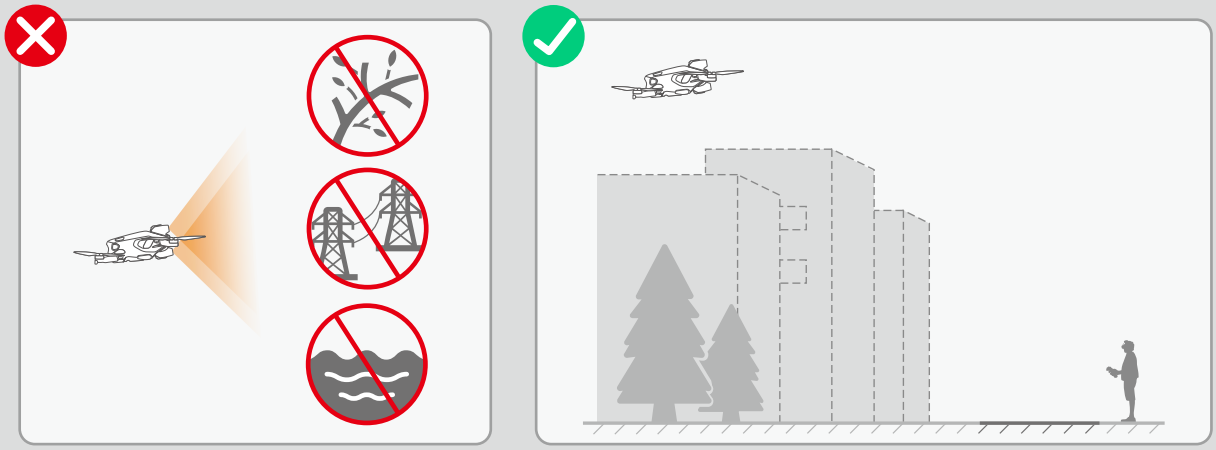

- Be aware of the availability of obstacle avoidance by checking the status update on the icon and prompt warning message. Stop using Deep Track when obstacle avoidance becomes unavailable.
- Stay vigilant of the surrounding people, animals and vehicles during the tracking.
- Do not use the Deep Track feature when environmental and external constraints are present. Refer to *"Obstacle Avoidance and Landing" on page 43*.
- Do not use the Deep Track feature near the flight restriction areas.

Safety Notices for Selecting Object in Deep Track

- Before activating the Deep Track feature, prioritize privacy considerations and comply with local laws.
- Users should only track vehicles, boats, or personnel (excluding children). using the drone to track other moving objects (such as RC car or RC boat), do so cautiously and at your own risk.



- The drone cannot track a subject that has undergone a shape-shifting process (such as people jumping and squatting). Users should fly with caution in this scenario.
- Be extra caution when using Deep Track feature in the following scenarios:
  - If the tracked object is moving on the uneven surface.
  - If the tracked object undergoes significant shape-shifting while moving.
  - If the line of sight to the object has been blocked for an extended period.
  - If the texture and color of the object lack distinction against the surrounding area.
- Do not proceed with tracking if the selected object is not identified as a human, vehicle or boat.
- The tracked object might deviate if the originally selected object is overlapping with another object.
- In case the tracking object is lost due to a blocked line of sight, the drone will prompt user to re-select the tracking object.

© 2025 Antigravity All Rights Reserved

Sky Genie

Introduction to Sky Genie

The Sky Genie features a collection of pre-defined flight paths that can be automatically executed by the drone to allow users to produce professional cinematic footage with minimal intervention. This intuitive feature empowers users to replicate the complex cinematic move with just a single tap.

- Only use the Sky Genie feature in a clear and unobstructed environment. Avoid tall buildings or obstacles near the flight path, and ensure no other individuals, animals, or obstacles are present on the route besides the selected subject being filmed.
- The head track perspective and the drone's heading do not overlap while executing the Sky Genie flight path. Be aware that clearance of the flight path is required, and be ready to take control of the drone when necessary.
- Do not activate the Sky Genie in the following scenarios:
  - When the selected subject is obstructed for an extended period and is not visible within the live view of the Vision Goggles.
  - When the selected subject is beyond of line of sight, hence it prevents the users to observe the flight status of the drone.
  - DO not attempt to select the subject that is in mid air. h
  - When the texture or the color of the subject being film is too similar to the surrounding environment.
  - DO NOT use the Sky Genie in environments that are too bright or too dark.
  - DO NOT use the Sky Genie when the selected subject is in close proximity to the tall buildings, resulting in poor GNSS signals.
- DO NOT use the Sky Genie feature in areas where branching or fine objects (such as tree branches, power lines), transparent objects (such as water, glass), or monochrome surfaces (such as white walls) are present, as it may affect the flight safety of your drone.
- While obstacle avoidance can enhance safety when using the Sky Genie, it is not a substitute for the user's discretion regarding flight safety. Users must remain alert and be prepared to take control of the drone from the Grip Controller to safeguard flight safety.
- Before activating the Sky Genie feature, prioritize privacy considerations and comply with local laws.

The following shooting patterns are supported by Sky Genie:

	Orbit	The drone circles the subject and cruises at the pre-set flight parameters
	Fly Away	The drone flies upwards and gradually fly away from the subject to reveal the surroundings.
	Ascend	The drone flies direct above the subject and moves upwards.
	Spiral Ascent	The drone flies upwards and moves away from the subject as it spiral around.
	Oval Orbit	The drone is circle the subject in a titled and stretched circle trajectory. It first fly toward the back of the subject then moving away.
	Arc Shot	The drone first approaches the subject in a straight line, then banks a turn around the subject before resuming a straight flight path. Users may choose either clockwise or counterclockwise as the rotation direction.

© 2025 Antigravity All Rights Reserved

	Antigravity Line	The drone approaches and flies past the subject in a straight line, while the head tracking view is rotated 180° with the subject framed at the center.

Using Sky Genie

1. Find an open, unobstructed area with flat ground to take off your drone. It is recommended to ascend your drone to an safe altitude (3 meters above the take off site) before activate the Sky Genie feature.

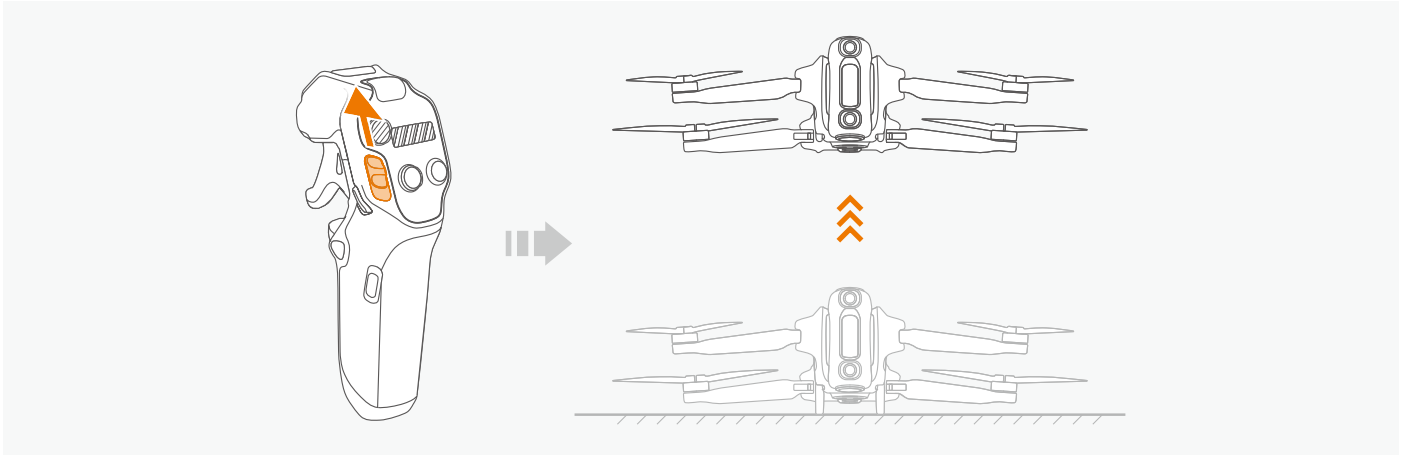

2. Press once the Menu Button on the Grip Controller to enter the flight menu of the Vision Goggles. Select Sky Genie by using the virtual laser beam.

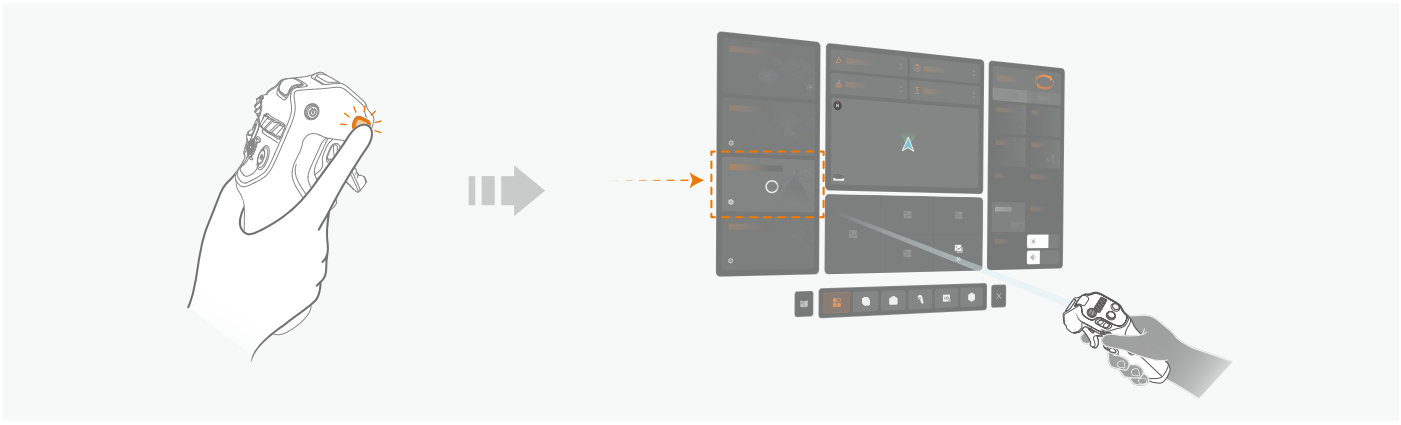

3. Select the desired Sky Genie shot option after entering the sub menu. You may preview the demonstration of the Sky Genie shot in the sub menu section as well.

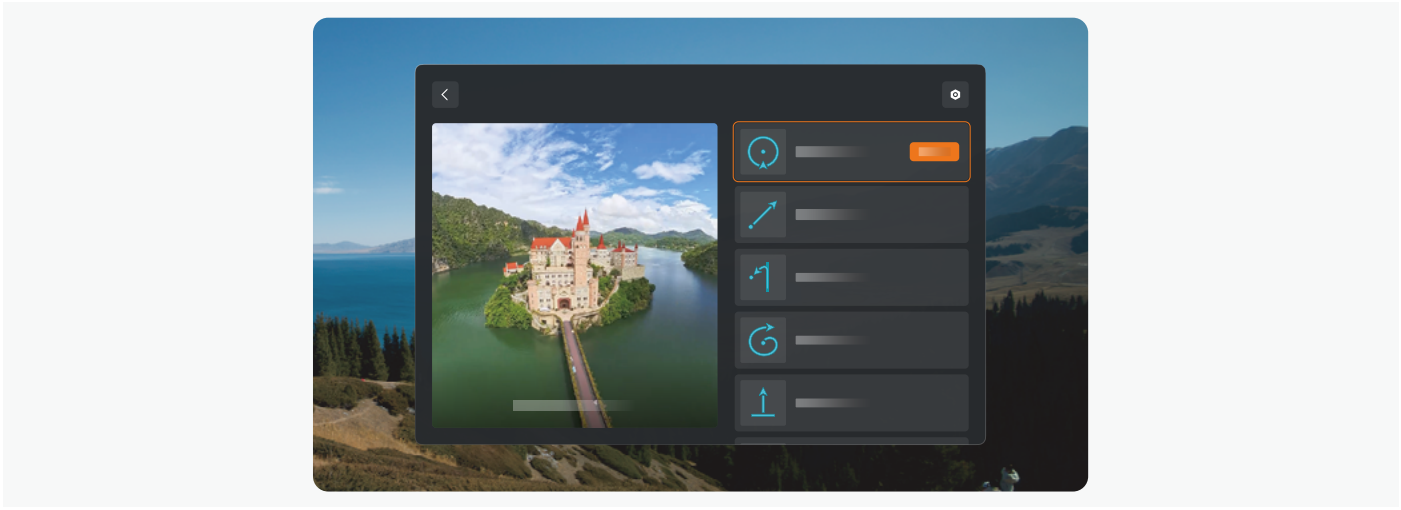

© 2025 Antigravity All Rights Reserved

4. While in this page, user can also selection the Vision Goggles view perspective during the Sky Genie maneuver was executing. The users may select one of the two view perspective:
   - Sky Genie View
   - Free Motion View

   In the Sky Genie View, the user's perspective is in sync with the Sky Genie maneuver effect, while the Free Motion view allows user to disassociate the viewing perspective from the Sky Genie maneuver.

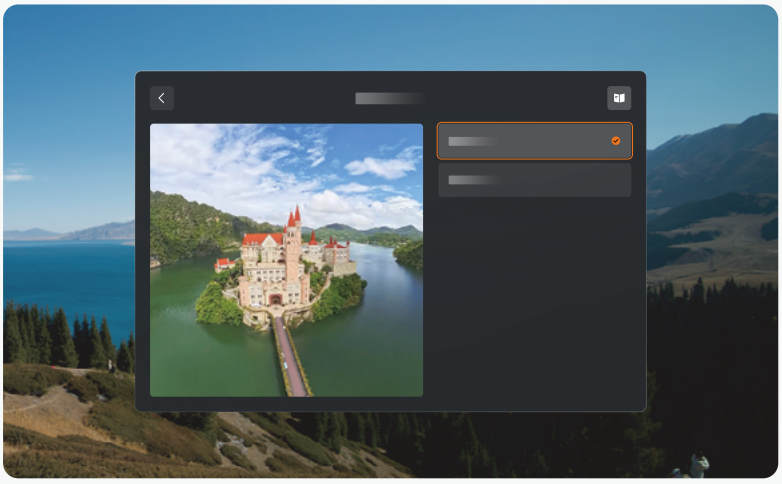

5. Press and hold the C1 button to select the subject that you want to film. Release the C1 button to confirm the selection. A green target box will frame the subject if the drone has successfully recognized the subject.

> The drone might automatically adjust its position in order to obtain an optimal viewing angle to capture the subject. Remain calm if the drone is moving while selecting the subject.

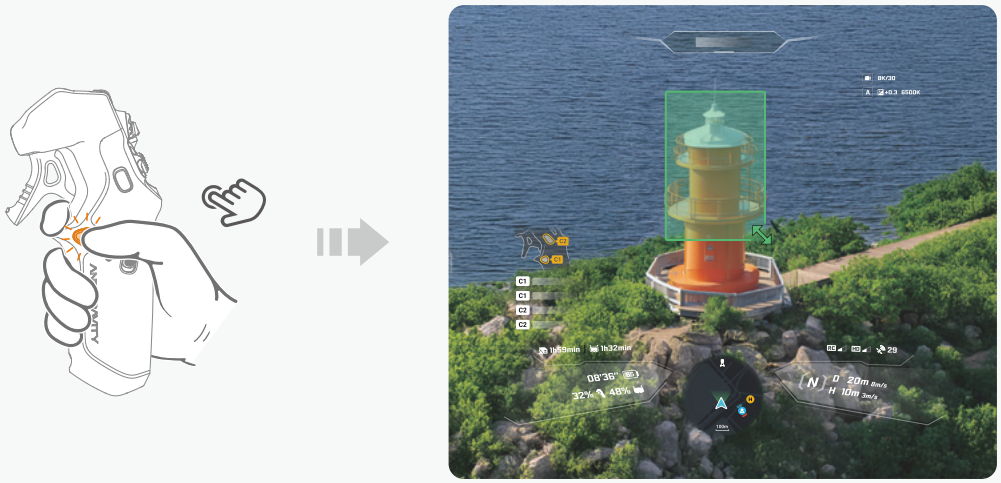

© 2025 Antigravity All Rights Reserved

Press the C1 button again to start executing the selected Sky Genie shot. The drone will automatically execute the flight route and start recording the video footage. After completing the flight route, the drone will return to the starting point and hover in place and await input from users.

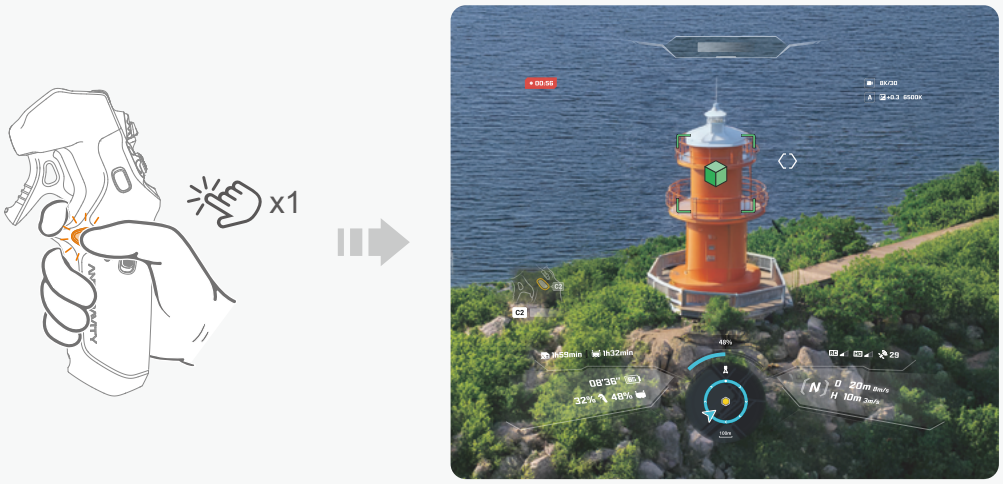

To achieve the best result in selecting the subject, focus on selecting the main body of the subject and reduce the selection of the surrounding background.

- After the subject is selected, users can press once on the C2 button to adjust flight route parameters, such as the distance or the rotation directions. Adjust these parameters to suit your needs. Meanwhile, the estimated flight route and flight time will be displayed to help you assess the flight.
- Upon your access to the Sky Genie page, a countdown prompt might be displayed to alert users that the current lighting condition will prevent obstacle avoidance from working properly. You must read and confirm the selection before proceeding with the using the Sky Genie.

5. While the drone is in executing Sky Genie shot, users can press and hold the C2 button on the Grip Controller to exit the current flight route. Meanwhile, users can also abort the flight route at any moment by pressing once on the Brake button on Grip Controller.

© 2025 Antigravity All Rights Reserved

Sky Path

Introduction to Sky Path

In Flight Path mode, users can construct a flight route by setting way points while the drone is in flight. After the flight route has been established and saved, the drone can then automatically retrace the flight route and record video footages for multiple times.

Caution:

- Only use the Flight Path feature in an open, unobstructed area, ensure there is no visible tall structure at the surroundings before each flight. Meanwhile, make sure there is no individual, animal or other obstacle on the flight path.
- DO NOT attempt to use Flight Path feature in one of the following scenarios:
  - When GNSS signal is weak.
  - When there are tall buildings or structures on the planned flight path.
  - DO NOT use Sky Path in environments that are too bright or too dark.
  - When the texture or the color of the subject being film is too similar to the surrounding environment.
- DO NOT use the Sky Genie feature in areas where branching or fine objects (such as tree branches, power lines), transparent objects (such as water, glass), or monochrome surfaces (such as white walls) are present, as it may affect the flight safety of your drone.
- While obstacle avoidance can enhance safety when using the Sky Genie, it is not a substitute for the user's discretion regarding flight safety. Users must remain alert and be prepared to take control of the drone from the Grip Controller to safeguard flight safety.
- Before activating the Sky Path feature, prioritize privacy considerations and comply with local laws.

Using Sky Path

1. Creating Flight Route

Access to the Flight Route sub menu from the main menu of the Vision Goggles on the left. Click on the orange button on the right to start creating a new flight route.

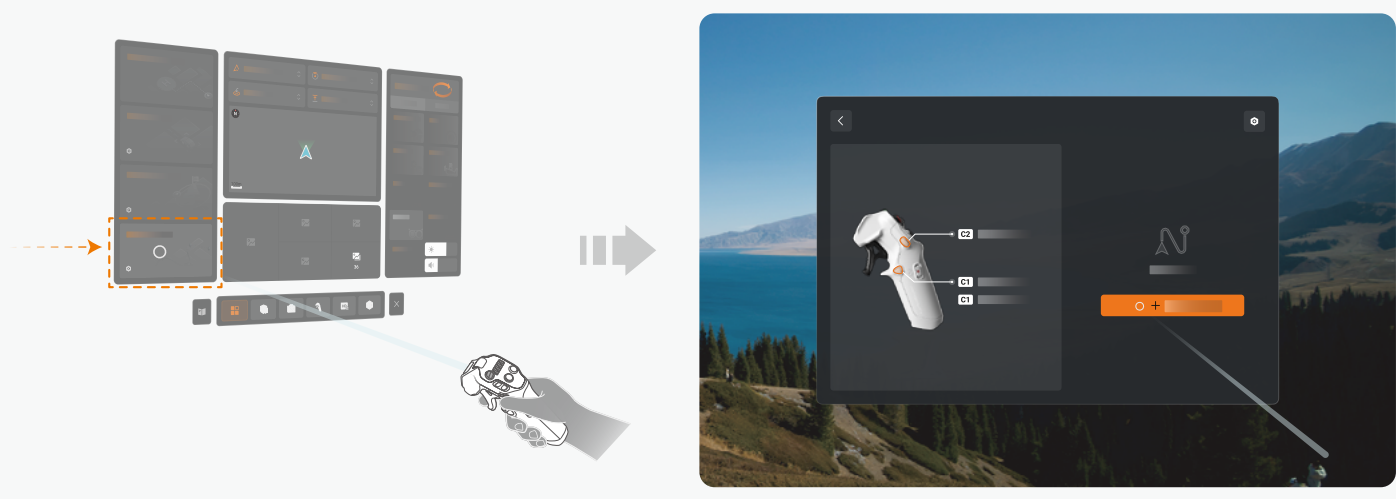

Caution: Upon your access to the Sky Path page, a countdown prompt might be displayed to alert users that the current lighting condition will prevent obstacle avoidance from working properly. You must read and confirm the selection before proceeding with the Sky Path.

© 2025 Antigravity All Rights Reserved

Apart from creating flight routes, users can also select and execute previously saved flight routes in this window. Additionally, users can set up the in-flight perspective for the selected flight routes that are to be run.

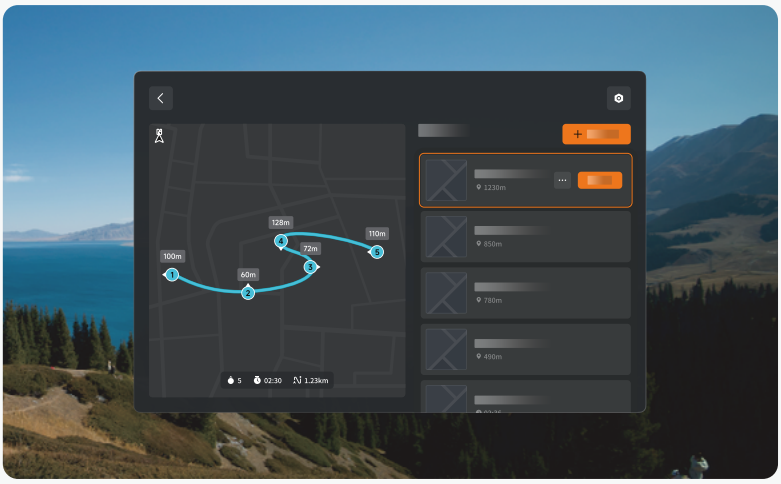

Cautions:

- Find an open and unobstructed flight site and take off your drone before creating a new flight route.
- Users can rerun the previously saved flight path under the condition that the flight must be carried out at the same Home point and under the same weather conditions. Failure to do so might result in not being able to safely execute the flight path.
- Ensure obstacle avoidance is available for use before using Sky Path function to prevent potential flight safety accidents.

2. Adding Waypoints

Take off the drone and maneuver it to the starting point of the desired flight path. Ensure the GNSS signal is strong. After confirming the heading and current position of the drone, press once on the C1 button to add the current location as the waypoint. Once completed, the waypoint will be added to the queue at the bottom of the screen. You can now proceed with the flight to the next location and repeat the previous operation. Additionally, press the C2 button to delete the previous waypoint.



© 2025 Antigravity All Rights Reserved

Cautions:

- While creating waypoints during the flight, users must ensure that the GNSS signal is strong at all times. Waypoints cannot be created when the GNSS signal is weak. Failure to monitor the GNSS signal strength during the waypoint creation process may pose safety risks when executing the flight path.
- The actual flight path between waypoints is in a curved shape, hence there exists a height difference in between. Users must remain vigilant while the drone traverses each of the waypoints and regain control of the drone if necessary.

3. Confirming Flight Path

After setting all waypoints, press and hold the C1 button to finish setting the waypoints. We will then enter the waypoint confirmation page.



On this page, users can add or delete waypoints, adjust the waypoint queue, and also set the drone's flight speed and smoothness while executing the flight path. After fine-tuning the parameters, users can select **"Save and Execute"**. The drone will adjust its heading and start flying from the current position to the starting point of the flight path, and proceed with executing the flight path.

Caution:

- The position and altitude difference between the starting point and the endpoint of the flight path should not be too large. Otherwise, the battery level might not be sufficient to support the long-haul flight and could affect the possibility of safely returning your drone.
- Before executing the flight path, make sure the obstacle avoidance is turned on, otherwise the drone might not be able to by-pass the obstacles during the flight.

© 2025 Antigravity All Rights Reserved

4. Executing the Flight Route

When the drone is executing its flight path, the mini map on the Vision Goggles will display the preset route. Users can monitor the status of the route execution through the mini map.



5. Exiting the Flight Route

Users can abort the current flight route by long-pressing the C2 button. At the same time, users can also exit the flight route by pressing once on the emergency brake button. The drone will hover in place and awaits commands.

- The drone will automatically abort the current flight route and hover when the obstacle avoidance system becomes unavailable. User's discretion is required.
- As soon as an obstacle is detected on its flight path, the drone will immediately abort the flight and hover.

Product Specification

A1 Drone

Drone	
Model	DE001
Maximum Takeoff Weights	249 g (0.548 lbs) with Standard Flight Battery 291 g (0.642 lbs) with High-Capacity Flight Battery
Dimensions	Folded：141.3 mm × 96.2 mm × 81.4 mm 5.56 inches x 3.79 inches x 3.21 inches (L×W×H) Unfolded：308.6 mm × 382.3 mm × 89.2 mm 12.15 inches x 15.05 inches x 3.51 inches (L×W×H)
Max Ascent Speed	C mode: 3 m/s N mode: 6 m/s S mode: 8m/s
Max Descent Speed	C mode: 3 m/s N mode: 6 m/s S mode: 8m/s
Max Horizontal Speed*	C mode: 3 m/s N mode: 12 m/s S mode: 16 m/s
Max Takeoff Altitude	4,000 m or 13,123 ft (with Standard Flight Battery) 3,000 m 9,842 ft (with High-Capacity Flight Battery)

© 2025 Antigravity All Rights Reserved

Max Flight Time	Approx. 24 mins (with Standard Flight Battery)** Approx. 39 mins (with High-Capacity Flight Battery)**
Max Wind Resistance	10.7 m/s or 23.9 mph
Operating Temperature	-10°C - 40°C (14°F - 104°F)
Global Navigation Satellite System	BDS + GPS + Galileo
Hovering Accuracy Range (GNSS)	Horizontal: ±0.5 m, Vertical: ±0.5 m (GNSS signal strong and open areas)
Hovering Accuracy Range (Vision)	Horizontal: ±0.1 m, Vertical: ±0.1 m (Well-lit environment with distinct surface texture)
Internal Storage	20 GB
Supported Storage Card	MicroSD
List of Recommended Storage Card	SanDisk Extreme PRO 64GB V30 U3 A2 microSDXC SanDisk Extreme PRO 128GB V30 U3 A2 microSDXC SanDisk Extreme PRO 256GB V30 U3 A2 microSDXC SanDisk Extreme PRO 512GB V30 U3 A2 microSDXC SanDisk Extreme PRO 1TB V30 U3 A2 microSDXC Lexar Silver Plus 64GB A2 V30 microSDXC Lexar Silver Plus 128GB A2 V30 microSDXC Lexar Silver Plus 256GB A2 V30 microSDXC Lexar Silver Plus 512GB A2 V30 microSDXC Lexar Silver Plus 1TB A2 V30 microSDXC Kingston CANVAS Go! Plus 64GB A2 V30 microSDXC Kingston CANVAS Go! Plus 128GB A2 V30 microSDXC Kingston CANVAS Go! Plus 256GB A2 V30 microSDXC Kingston CANVAS Go! Plus 512GB A2 V30 microSDXC Kingston CANVAS Go! Plus 1TB A2 V30 microSDXC
Ground Noise Level	Hovering: 75.0 dB (A) In Flight at 3 m/s: 73.0 dB (A)
Constant Noise Level	Hovering: 74.0 dB (A) In Flight at 3 m/s: 72.0 dB (A)
360 Camera	
Sensor Size	1/1.28 inch
Aperture	F2.2
ISO Range	100 - 6400
Shutter Speed	Video: 1/8000 Photo: 1/8000 - 1/2

© 2025 Antigravity All Rights Reserved

White Balance	2,000K - 10,000K
Max Image Size	Approx. 55MP (10486 × 5248) Approx. 14MP (5248 × 2624)
Camera Mode	Normal, HDR, Burst, AEB
Video Resolution	8K: 7680 × 3840@30/25/24fps 5.2K: 5248 × 2624@60/50/30/25/24fps 4K: 3840 × 1920@100fps 4K Slo-Mo: 3840 × 1920@30/25/24fps
Video Format	INSV, Export via Antigravity app or Studio desktop application.
Photo Format	INSP, Export via Antigravity app or Studio desktop application. DNG
Max Video Bitrate	170 Mbps
Video Encode Format	H.264, H.265
Supported File System	exFAT
Vision and Infrared Senors	
Forward	Measurement Range: 0.5 m - 18 m (1.6–59.1 ft) Effective Sensing Speed: Flight Speed ≤12 m/s (26.8 mph) FOV: Horizontal 93°, Vertical 105°
Downward	Measurement: 0.3 m - 7.5 m (1.0–24.6 ft) Effective Sensing Speed: Flight Speed ≤ 6 m/s (13.4 mph) FOV: Front and Back 107°, Left and Right 90°
Operating Environment	Forward: Surfaces with discernible patterns and adequate lighting (lux > 15) Downward: Surfaces with discernible patterns, diffuse reflectivity > 20% (e.g. cement pavement, stout trees), and adequate lighting (lux > 15)
Video Transmission	
Video Transmission System	OmniLink 360
Live View Quality	2k@30fps
Transmitter Power (EIRP)	2.4 GHz : < 30 dBm(FCC), < 20 dBm(CE / SRRC / MIC) 5.1 GHz : < 21 dBm(FCC), < 23 dBm(CE) 5.8 GHz : < 30 dBm(FCC / SRRC), < 14 dBm(CE)

© 2025 Antigravity All Rights Reserved

Frequency	2400 - 2483.5 MHz* 5150 - 5250 MHz* 5725 - 5850 MHz* *Availability subject to countries and regions. Local law and regulations apply.
Max Transmission Distance (Open, free of interference)	10 km (6.2 mile) (FCC) 8 km (5.0 mile) (SRRC) 6 km (3.7 mile) (CE) 4 km (2.5 mile) (MIC) *Tested outdoors at 25°C (77°F) in an open, interference-free environment. Data reflects maximum one-way transmission distance without return-to-home under each standard. Actual performance may vary depending on environment, usage, and firmware.
Max Transmission Distance (Obstructed, with interference)	Low Interference/Buildings: approx. 0.1–0.5 km (0.06–0.31 mi) Low Interference/Trees: approx. 0.5–3 km (0.31–1.9 mi) *Tested under FCC standard in obstructed environments with typical low interference. Used for reference purposes only and provides no guarantee for actual transmission distance.
Max Transmission Rate	30Mbps
Latency	Approx. 150ms *Tested in an open, interference-free environment. Actual latency may vary depending on environmental differences.
Antenna	4 antennas, 2T4R
Wi-Fi	
Protocol	802.11a/b/g/n/ac
Operating Frequency	2400 MHz - 2483.5 MHz* 5150 MHz - 5250 MHz* 5725 MHz - 5850 MHz* * Availability subject to countries and regions. Local law and regulations apply.
Transmitter Power (EIRP)	2.4 GHz: < 20 dBm(CE / SRRC / MIC / FCC) 5.1 GHz: < 20 dBm(FCC / CE) 5.8 GHz: < 20 dBm(FCC / SRRC), < 14 dBm(CE)
Bluetooth	
Protocol	Bluetooth 5.0

© 2025 Antigravity All Rights Reserved

Operating Frequency	2.400 GHz - 2.4835 GHz
Transmitter Power (EIRP)	< 10 dBm
Standard Flight Battery	
Model	BDE-mini-2360-7.16
Capacity	2360 mAh
Weight	Approx. 67.5 g (0.15 lb)
Rated Voltage	7.16 V
Charging Voltage	8.6 V
Cell Type	Li-ion 2S
Energy	16.9 Wh
Charging Temperature Range	5 - 45°C or 41 - 113°F, Charging stops when temperature exceeding 55°C (131°F)
Charging Time	Single battery: 45 mins*** Three batteries: 2 hours and 15 mins***
High-Capacity Flight Battery	
Mode Name	BDE-max-4345-7.16
Capacity	4345 mAh
Weight	Approx. 108.6 g (0.23 lbs)
Rated Voltage	7.16 V
Charging Voltage	8.6 V
Cell Type	Li-ion 2S
Energy	31.11 Wh
Charging Temperature Range	5 - 45°C or 41 - 113°F, Charging stops when temperature exceeding 55°C (131°F)
Charging Time	Single battery: 60 mins*** Three batteries: 3 hours***

© 2025 Antigravity All Rights Reserved

65W GaN Fast Charger	
Model	ADT-65BDC-P
Input Voltage	90 - 264V (47 - 63Hz)
Output Power	5V ~ 20V@65W / 5A MAX
Operating Temperature	-20 ~ 40° C
Battery Charging Hub	
Model	CINSBANA
Weight	Approx 118.5 g
USB C Input	PPS protocol: 5 - 10V / 5A PD protocol: 5V - 3A / 9V - 5A / 12V - 5A / 15V - 4A
USB C Output	PD protocol: 30W, 15V - 2A / 12V - 2.5A / 9V - 3A / 5V - 3A
Charging Time	Standard Flight Battery: · Single: 45 mins · Three: 2 hours 15 mins High-Capacity Flight Battery: · Single: 60 mins · Three: 3 hours

* Sea level and windless

** Obtained in a controlled environment temperature at 25°C (77°F) , altitude less than 50 m (164 ft), in a wind-free environment and at the cruising speed of 6 m/s. Camera set at 5.2K/30fps resolution when video recording disabled. The flight time may vary under different conditions.

*** Charging from the Antigravity 65W GaN Charger via the Antigravity Battery Charging Hub.

Vision Goggles

Flight Goggles	
Model	DGS001
Weight	Approx. 340 g (battery not attached)
Dimensions	Folded: 174 mm × 106 mm × 92 mm (L×W×H) Unfolded: 200 mm × 106 mm × 115 mm (L×W×H)
Inner Display Size	1.03 inch Micro-OLED
Inner Display Resolution	2560 × 2560

© 2025 Antigravity All Rights Reserved

Inner Display Refresh Rate	72 Hz
Interpupillary Distance Range	59 - 72 mm
Diopter Adjustment Range	-5.0 D to +2.0 D
FOV	DFOV 90° HFOV/VFOV 65°
Screen Recording Format	INSV
Playback Format	MP4, MOV, JPG, PNG, INSP, INSV
See-through FOV	HFOV 93°, VFOV 93°, DFOV 115°
Operating Temperature	-10°C to 40°C (14°F to 104°F)
Power Input	USB-C with dedicated external battery
Internal Storage	Approx. 30 GB
Supported Storage Card	MicroSD
List of Recommended Storage Card	SanDisk Extreme PRO 64GB V30 U3 A2 microSDXC SanDisk Extreme PRO 128GB V30 U3 A2 microSDXC SanDisk Extreme PRO 256GB V30 U3 A2 microSDXC SanDisk Extreme PRO 512GB V30 U3 A2 microSDXC SanDisk Extreme PRO 1TB V30 U3 A2 microSDXC Lexar Silver Plus 64GB A2 V30 microSDXC Lexar Silver Plus 128GB A2 V30 microSDXC Lexar Silver Plus 256GB A2 V30 microSDXC Lexar Silver Plus 512GB A2 V30 microSDXC Lexar Silver Plus 1TB A2 V30 microSDXC Kingston CANVAS Go! Plus 64GB A2 V30 microSDXC Kingston CANVAS Go! Plus 128GB A2 V30 microSDXC Kingston CANVAS Go! Plus 256GB A2 V30 microSDXC Kingston CANVAS Go! Plus 512GB A2 V30 microSDXC Kingston CANVAS Go! Plus 1TB A2 V30 microSDXC
Video Transmission	
Video Transmission System	OmniLink 360
Operating Frequency	2400 - 2483.5 MHz* 5150 - 5250 MHz* 5725 - 5850 MHz* * Availability subject to countries and regions. Local law and regulations apply.

© 2025 Antigravity All Rights Reserved

Transmitter Power (EIRP)	2.4 GHz: < 30 dBm(FCC), < 20 dBm(CE / SRRC / MIC) 5.1 GHz: < 21 dBm(FCC), < 23 dBm(CE) 5.8 GHz: < 30 dBm(FCC / SRRC), < 14 dBm(CE)
Latency	150 ms* * Obtained in an open area without radio signal interference. Actual values vary depending on external environmental factors.
Max Video Bitrate	30 Mbps
Antenna	Six antennas, 2T2R (dynamically switching)
Wi-Fi	
Protocol	802.11a/b/g/n/ac/ax
Operating Frequency	2400 - 2483.5 MHz* 5150 - 5250 MHz* 5725 - 5850 MHz* * Availability subject to countries and regions. Local law and regulations apply.
Transmitter Power (EIRP)	2.4 GHz: < 20 dBm (CE / SRRC / MIC / FCC) 5.1 GHz: < 20 dBm (FCC / CE) 5.8 GHz: < 20 dBm (FCC / SRRC), < 14 dBm (CE)
Antenna	2T2R
Bluetooth	
Protocol	Bluetooth 5.2
Operating Frequency	2.400 GHz - 2.483 GHz
Transmitter Power (EIRP)	< 10 dBm
GFSK	
Compatible	Antigravity Grip Motion Controller
Operating Frequency	2.400 GHz - 2.483 GHz
Transmitter Power (EIRP)	< 10 dBm
Transmission Distance	Approx. 10 m (32 ft)
Vision Goggles Battery	
Model	DGS-4500-7.3

© 2025 Antigravity All Rights Reserved

Weight	Approx. 175 g
Battery Life	Approx. 2 hours (ambient temperature at 25°C or 77°F)
Rated Voltage	7.3 V
Capacity	4500 mAh
Charging Power	5V⎓3A; 9V⎓3A; 12V⎓2A
Charging Time	Less than 2.5 hours
Charging Temperature	3°C - 45°C (Charging stops when temperature is higher than 55°C or 131°F.)
Supported Power Cable	Compatible with Antigravity USB-C to DC power cable only.

Grip Motion Controller

Controller	
Model	SRCSE001
Weight	Approx. 115 g
Dimensions	143 mm × 45mm × 72.5 mm (L×W×H)
Operating Temperature	-10°C - 40°C
Operating Frequency	2.400 GHz - 2.483 GHz
Transmitter Power (EIRP)	< 10 dBm
Transmission Distance	Approx. 10 m (32 ft)
Battery Life	Approx. 4 hours (ambient temperature at 25°C)
Charging Port	USB-C (5V/2A)
Charging Time	Approx. Less than 2.5 hours (ambient temperature at 25°C)
Charging Temperature	5°C to 45°C (Charging stops when temperature is higher than 55°C or 131°F.)
Capacity	2300 mAh
Rated Voltage	3.6V

© 2025 Antigravity All Rights Reserved

Frequently Asked Questions (FAQ)

1. What can I do if the Battery Charging Hub become unresponsive after the firmware update?

This issue may arise from the unexpected power outage during the firmware update or for other reasons. Please follow one of the following solutions to resolve the issue

- Download the desktop application Antigravity Sync from the official website. Install this application on your desktop and attempt to update the firmware of the Battery Charging Hub.
- Connect the Battery Charging Hub to a power source, power on, and let it sit still for more than 5 minutes. The Battery Charging Hub will attempt to roll back the firmware, and it should resume normal operation once the roll back is complete.

2. How to view the E-tag label for compliance information?

Power on the Vision Flight Goggles, press on the menu button on the Motion Controller and access to the general setting page. Select " " - "About " - " Compliance" at the bottom right corner to access to the E-tag.

3. Why is the camera's stitching calibration not working properly?

It is recommended to carry out stitching calibration in a open outdoor environment. And, due to system limitations, users will not be able to carry out the stitching calibration the following scenarios:

- Motors are rotating and the drone is in idle state.
- When it in the low light environment.

4. Are there any limitation when setting up waypoint in the Sky Path?

Yes. It is recommended only set up no more than 200 waypoints in a single flight route.

5. What if the lefthand side LED indicators keep blinking after power on?

	It indicates battery error, contact your local resellers or offical customer service for help.

6. What should I do if my myopia prevent me from using he supplied corrective lenses?

Lens Selection Recommendations

1. The lens edge should not exceed 2.8mm. If the lens edge is between 2.5mm and 2.8mm, it is advisable to remove the base of the lens frame to increase the thickness space when wearing Vision Goggles, to avoid the lens being too close to the eye lashes.
2. It is recommended to use lenses with a refractive index of 1.60 or higher, which can make the lenses thinner and lighter, and avoid the eyelashes touching the lenses.
3. It is recommended to use lenses with a prescription of up to +3.00 in conjunction with this frame to achieve the optimal user experience.

© 2025 Antigravity All Rights Reserved

Installations of the Lens

1. Locate the red mark between two lens frames and separate them from each other.

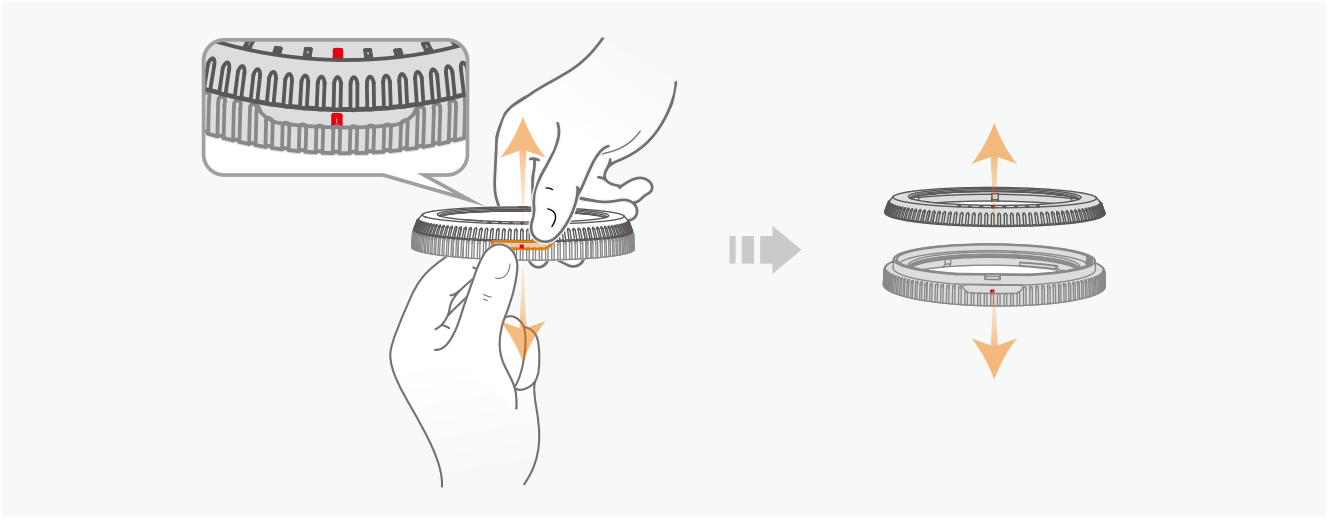

2. Mount the new lens onto the base of the lens frame.

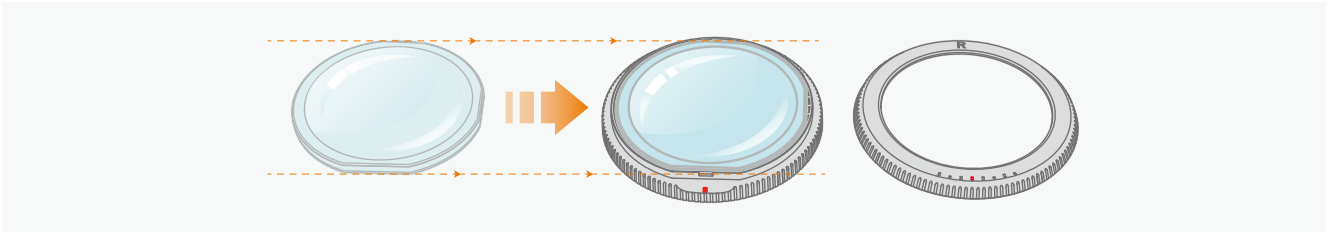

3. After mounting the lens on the base, adjust the position of the lens and apply pressure to ensure alignment with the red dot on the base. Press down on the two components until you hear a “click”. Ensure there are no gaps between two lens frames.

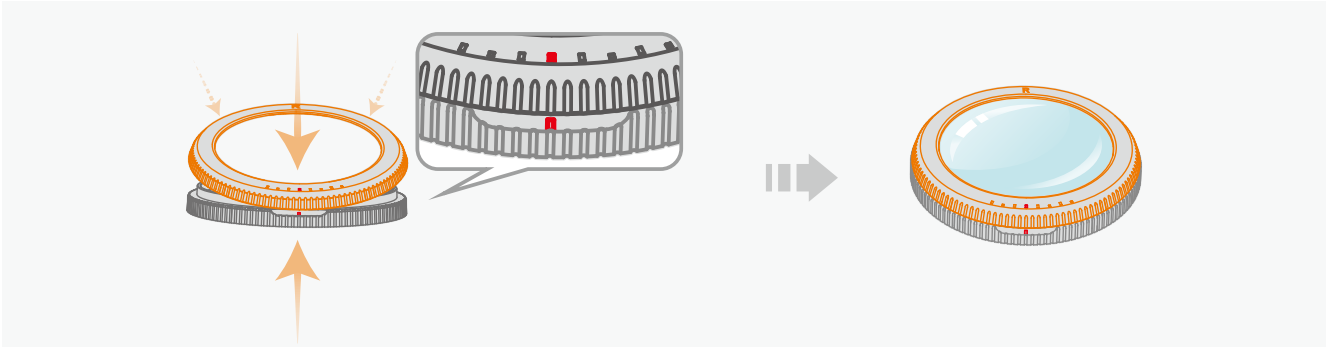

4. Attach the lens frame onto the Vision Goggles with the concave side facing you (the side with the lens frame logo). For detailed installation instructions, please refer to ***“Using Vision Correction Lenses” on page 11***.

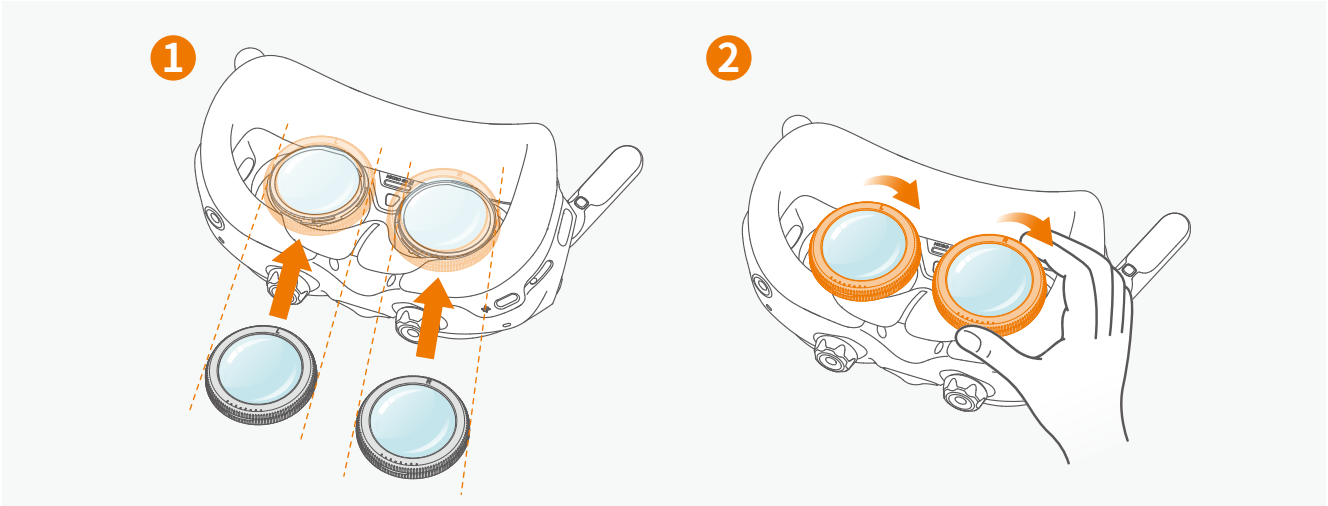

© 2025 Antigravity All Rights Reserved

Appendix

Compliance Information

MTOM Information

The aircraft's Maximum Take-Off Mass (MTOM) is 249 g*, in compliance with the C0 classification requirements under EU 2019/947 Regulation. When the drone is attached with the following approved accessories. The C0 certification can be identified by the C0 label attached to the drone.

Name	Model	Size	Weight
Antigravity A1 Propeller	CINSBANG	15.85 × 74.7 3 × 5.88 mm	0.95 g
Antigravity A1 Flight Battery	BDEmini-2360-7.16	50.8 × 27.2 × 89.6 mm	66.7 g
SD card	N/A	11 × 15 × 1 mm	0.3 g

The aircraft's Maximum Take-Off Mass (MTOM) is 291 g*, in compliance with the C1 classification requirements under EU 2019/947 Regulation. When the drone is attached with the following approved accessories. The C1 certification can be identified by the C1 label attached to the drone.

Name	Model	Size	Weight
Antigravity A1 Propeller	CINSBANG	15.85 × 74.7 3 × 5.88 mm	0.95 g
AntigravityA1 High Capacity Flight Battery	BDEmax-4345-7.16	50.8 × 27.2 × 89.6 mm	108 g
SD card	N/A	11 × 15 × 1 mm	0.3 g

Rotation Speed and Sound Level

Maximum Motor Rotation Speed	12,500 RPM
Sound Level	75 dB (A)
Maximum Vertical Speed at Landing	8 m/s (S mode)

Firmware Versions of RC Devices

Name	Model	Firmwares Version
Antigravity Vision Goggles	DGS001	2.7
Antigravity Grip Motion Controller	SRCSE001	2.7
Antigravity A1 Drone	DE001	4.9

© 2025 Antigravity All Rights Reserved

App Versions of RC Devices

Name	Version	Compatibility
Antigravity App	1.0.0	iOS 17.0 / Android 10.0 or later
Unity App	1.0.0	iOS 17.0 / Android 10.0 or later

List of Replacement Parts

Antigravity Propellers

Antigravity Flight Battery

Antigravity High-Capacity Flight Battery

Remote Identification Protocol

Transmission protocol: Bluetooth LE. Note that the Remote ID broadcasting is only required for the aircraft with C1 certification(MTOM above 250g) .

Disposal of Used Parts



Observe the local regulations related to electronic devices when disposing of the drone, goggles and remote controller

Data Security and Privacy

Operator Registration

Upon the first use of the Antigravity App, the app will prompt the user to sign up for registration. Once the registration process is complete, the user can then proceed to access the full functionality of the A1 drone, including unlocking restricted access to the airspace.

Data Integrity Risk for Drone Users

Attention Drone Users: Please be aware that the integrity of your data, including flight logs and media files, is at risk of being compromised during upload and download operations. When transferring data between your drone and other devices, there is a possibility of unauthorized access, data corruption, or loss. To safeguard your data, ensure that secure transfer protocols are in place, and regularly back up important files to mitigate potential threats.

Maintenance Instructions

To avoid serious injury to children and animals, observe the following rule: .

1. Store the Flight Battery and remote controller devices (i.e. Vision googles, Grip controller) in a cool, dry place away from sunlight. Recommended storage temperature range is 22°-28°C (71°-82°F) for over three months. Do not store outside 14°-113°F (-10°-45°C).
2. Keep the A1 drone dry. If the A1 drone comes into contact of water or liquid, dry with a soft cloth. Never use alcohol, benzene, or flammable substances to clean it. Avoid humid or dusty storage areas.
3. Only connect to USB version 3.0 or newer. Do not use “power USB” devices.
4. Inspect all parts after any crash. Contact an authorized dealer if needed.
5. Regularly check Battery Level Indicators of the Flight Battery. The design charging cycle for the battery is 300 cycles; do not use the battery beyond this limit.
6. Transport the A1 drone with all arms folded when powered off.
7. Fold all antennas of the Vision goggles during transportation.
8. Charge the battery to exit sleep mode after long-term storage.
9. Store all devices (including but limited to A1 drones, Vision googles and Grip controllers) in a dry environment. There is no altitude requirement for storage.

© 2025 Antigravity All Rights Reserved

10. Remove the battery before servicing the A1 drone. Clean with a soft, dry cloth and avoid alcohol-based cleaners.
11. Turn off the battery before replacing or checking propellers.

FPV Operator Warning

While the operator is controlling the aircraft in FPV mode, it is essential to have a visual observer situated near the operator. The visual observer should be able to assist the operator in conducting the flight safely. Additionally, the visual observer must be able to communicate clearly with the operator.

GEO Awareness

Prerequisite:

Download the latest UGZ file from the EASA website (www.easa.europa.eu) and transfer the UGZ file to your mobile device.

Uploading UGZ:

Follow the instructions below to set up and refresh the UGZ database on the app.

1. Power on the drone, remote controller and the goggles. Ensure all devices are connected to each other.
2. Launch the app.
3. Go to “Settings > UGZ File Management”, tap “ Import” to start importing the UGZ file. Follow the on-screen instructions to complete the process.
4. When importing of the UGZ is complete successfully, you may see the prompt successful message on both the app and the goggle UI.

When UGZ Enabled:

Upon the aircraft approaching the restricted areas (horizontal distance: 160 meters, vertical distance: 40 meters) that are defined in the UGZ file, a warning message will prompt on the goggles to alert that user that the aircraft is about to entering the restricted area.

Remote ID

Follow the instructions below to upload the Remote ID of the aircraft operator.

1. Power on the goggles and then launch the app. Ensure the goggles is connected to the Antigravity app.
2. Access to the “Setting” from the main menu of the app, then proceed to click on the “Binding Operator Remote ID”. Refer to the in-app prompts
3. Follow the on-screen instruction to complete the Remote ID registration. Upon the completion of Remote ID registration, the user’s ID will appear in the “Account Safety” section.
4. When powered on, the drone automatically performs a Remote ID self-test. Before take off, please ensure the message of “Remote ID self-check passed” is displayed.

General Warning Messages

GNSS

If the Global Navigation Satellite System (GNSS) signal deteriorates, the following warning message will pop up in the Vision Goggles.

- Navigation system anomaly, please return to home point immediately.
- Alert: Remote ID GNSS System Failure Broadcasting disabled due to self-test anomaly. Confirm local flight permissions and contact customer support immediately for resolution.

Flight Battery

In the event of the Flight Battery performance is affected, the following warning message will be prompted in the Vision Goggles.

- The remaining power is only enough to return to the return point, and will automatically return. Click [C2 button] to cancel.

© 2025 Antigravity All Rights Reserved

Loss Control Signal

In the event of loss of the control signal between the controller and the drone, the following warning message will be prompted in the Vision Goggles.

- Transmission signal lost. The drone will hover Select RTH: Transmission signal lost. The drone will return.
- Remote control signal lost. The drone will hover Select RTH Remote control signal lost. The drone will return.

Geo Sensing

Upon approaching the designated restricted flight area, the following warning message will be prompted in the Vision Goggle.

- The aircraft is about to touch the no fly zone and its flight direction is restricted. Please control the plane to stay away or land safely as soon as possible.
- The aircraft has entered the no-fly zone. Please leave as soon as possible.
- The aircraft has reached the current height limit.

© 2025 Antigravity All Rights Reserved